WIL-RICH®

QUAD-5 PARTS

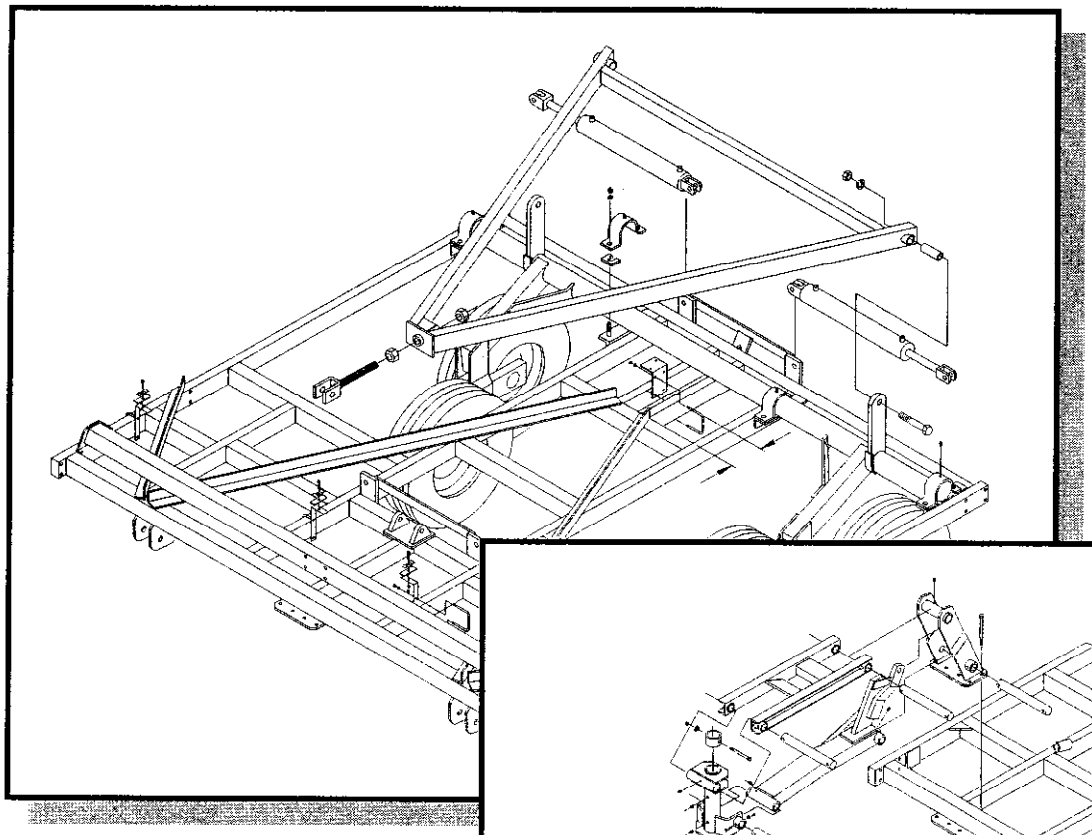

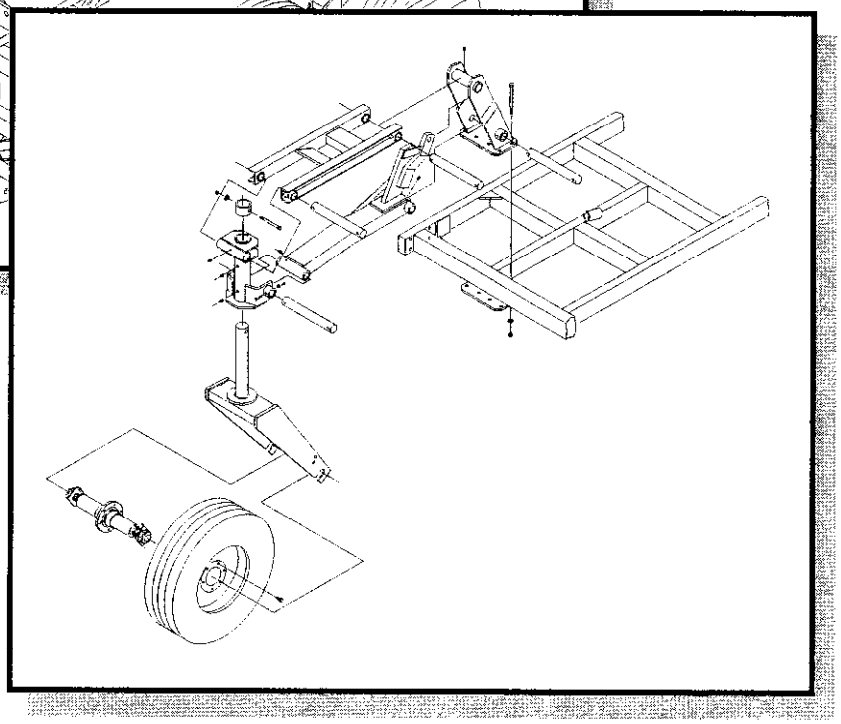

WIL-RICH
PO Box 1030
Wahpeton, ND 58074
PH (701) 642-2621
Fax (701) 642-3372

Printed in USA (74171) J&M 100 4/02

Orientation

Any reference to left (L) or right (R) sides or components is to be understood as being viewed from behind the implement and looking forward.

Serial Number Break

Every implement has a serial number located on the frame. These serial numbers are consecutively assigned to the implements as they are manufactured. To aid in part ordering, we reference to the serial number at the point the change occurred to provide an accurate means of determining the proper parts. See contents graphic, page 3, for location.

Modifications

It is the policy of WIL-RICH Operations to improve its products whenever possible and practical to do so. We reserve the right to make changes, improvements, and modifications at any time without incurring the obligation to make such changes, improvements and modifications on any equipment sold previously.

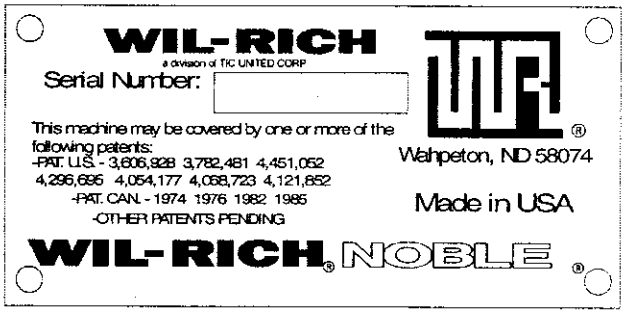

Contents

General Information 2
11' Main Frame 3
13' Main Frame (441250+) 4
13' Main Frame (441249-) 5
16' Main Frame (441250+) 6
16' Main Frame (441249-) 7
11' Floating Hitch 8
13' & 16' Floating Hitch (441250+) 9
13' & 16' Floating Hitch (441249-) 10
2' Rigid Wing Extension (441250+) 12
2' Rigid Wing Extension (441249-) 13
7' Wing (441250+) 14
7' Wing (441249-) 15
9'4" Wing (441250+) 16
9'4" Wing (441249-) 17
11'8" Wing (441250+) 18
11'8" Wing (441249-) 19
3' Outer Wing (441250+) 20
3' Outer Wing (441249-) 21
5' Outer Wing (441250+) 22
5' Outer Wing (441249-) 23
Wing Lift Link Assy 24
Saddle Stub 25
8" Guage Wheel - Wing (441250+) 26
8" Gauge Wheel - Wing (441249-) 27
9.3" Gauge Wheel - MF (441250+) 28
9.3" Gauge Wheel - MF (441249-) 29
11' Wing Rest 30
13' & 16' Wing Rest 31

WING LIFT HYDRAULICS

11' MF - 7' Wing 33
13' MF & 16' MF - 7' Wing (441250+) 34
13' MF & 16' MF - 7' Wing (441249-) 35
11' MF - 9'4" Wing 36
13' MF - 9'4" & 11' 8" Wings (441250+) 37
16' MF - 11'8" Wing (441250+) 38
13' & 16' MF-9'4" & 11'8" Wings (441249-) 39
11'MF - 9'4" w/5' Outer Wing 40
13' MF-9'4" w/3' & 5' Outer Wing(441250+) 41
13' MF-11'8" w/3' or 5' Outer Wing(441250+) 42
13' MF - 9'4" or 11'8" Wings w/3' or 5' Outer Wings (441249) 43
16' MF - 11'8" Wing w/3 'or 5' Outer Wings (441250+) 44
16' MF - 11'8" Wing w/3 'or 5' Outer Wings (441249-) 45
Tee Block 46

DEPTH CONTROL HYDRAULICS

11' MF - 7' & 9'4" Wing 47
13' MF - 7' & 9'4" Wings (441250+) 48
13' MF - 7' & 9'4" Wings (441249-) 49
13' & 16' MF - 11'8" Wing (441250+) 50
13' & 16' MF - 11'8" Wing (441249-) 51

CYLINDERS

4x8 Top Bypass (Series PX & PB) 52
4x9.3 Top Bypass (Series PE & PY) 53
3-1/2x24 Standard (Series O & RF) 54
4x30 Standard (Series KA & RD) 55

C-Shank Assembly 56
Hi-Torque Shank Assembly 57
Twin Spring Shank Assembly 58
Shovels & Spikes 59
1-3/4" Hub & Spindle 60
2" Hub & Spindle 61
Gauge Wheel Hub & Spindle 62
Walking Tandem - Wing 63
Walking Tandem - Main Frame 64
HD Auxiliary Hitch 65
Auxiliary Hitches 66
Gauge Wheel Scraper 67
Scrapers 68
Single Point Depth Control 69
Clearance Light Kit & SMV 70
Decals 71
Index ..... 72+

11' MAIN FRAME

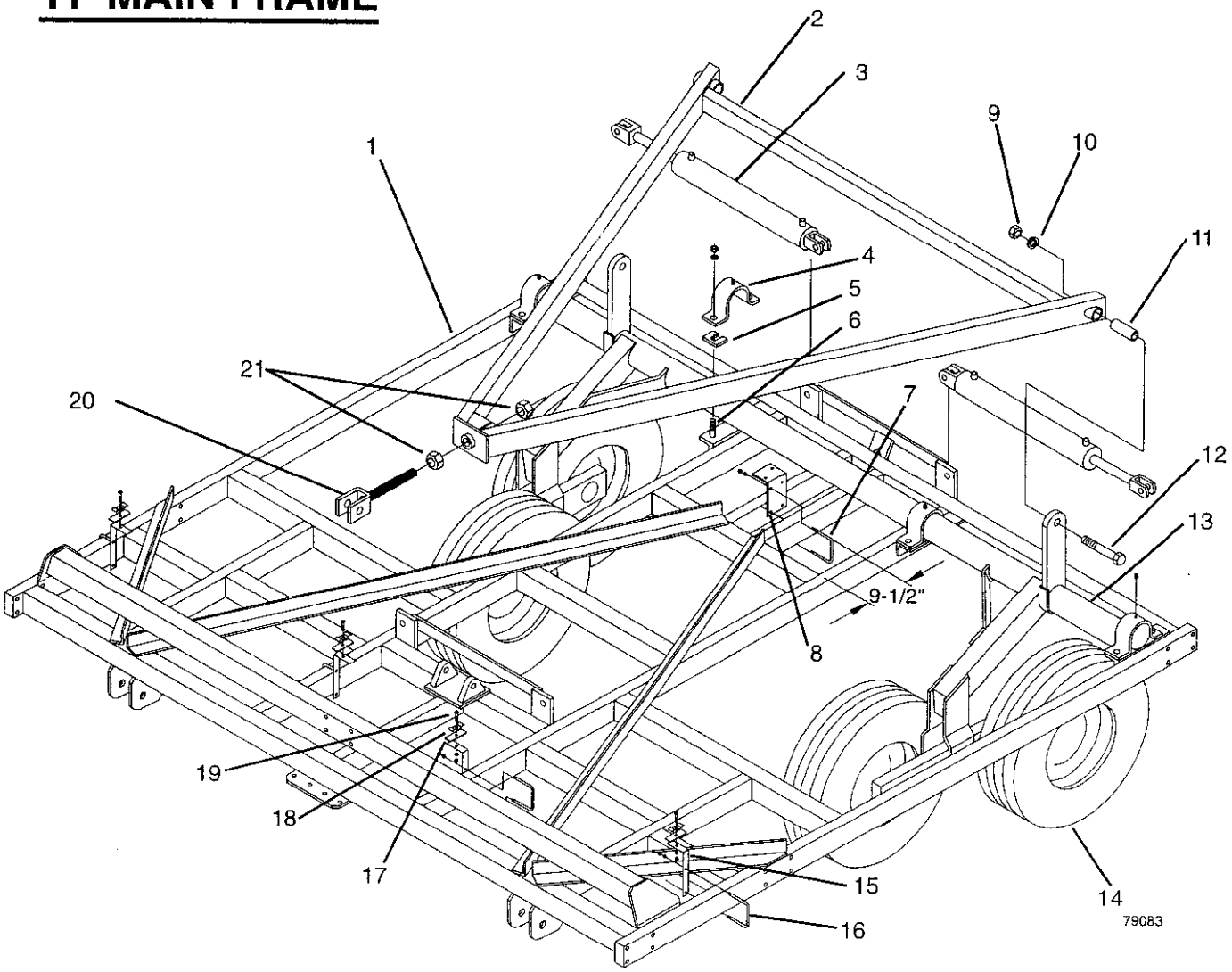

ITEM	PART NO	DESCRIPTION
1	66277	11' 5BQ5 Main Frame
2	66315	11' 5BQ5 Main Adjust Tube
3	51229	4x30 Hyd Cylinder
4	10399	Axle Cap
5	10176	Shim
6	88495	7/8NCx2-1/2 GR5 Bolt
7	88515	3/8NCx4x2-3/4 U-Bolt
8	56536	Manifold Mount
9	88430	1-1/4NC Lock Nut
10	88602	1-1/4 Flat Washer
11	66294	Tube
12	89134	1-1/4NCx7 GR5 Bolt
13	66313	11 5BQ5 Main Axle
14	16290	95Lx15 Wheel Assembly
	10498	15x8 Wheel Rim
	16287	95Lx15 Tubeless Tire 8Ply
	30784	Valve Stem Assembly

ITEM	PART NO	DESCRIPTION
15	13270	Pole Tube Bracket
16	88515	3/8NCx4x2-3/4 U-Bolt
17	15543	Base Plate
18	13215	Tube Clamp
19	88553	3/8NCx1-1/2 GR5 Bolt
20	66310	Center Adjust Rod
21	88685	1-3/8NC Heavy Hex Nut

Note: Standard nuts and lock washers are not called out. Anything other than standard will be called out.

STANDARD NUTS AND LOCK WASHERS

88172	**1/4NC Nut**	**88262**	**1/4 Lock Washer**
88103	**3/8NC Nut**	**88362**	**3/8 Lock Washer**
88104	**1/2NC Nut**	**88303**	**1/2 Lock Washer**
88126	**5/8NC Nut**	**88129**	**5/8 Lock Washer**
88110	**3/4NC Nut**	**88130**	**3/4 Lock Washer**
88371	**7/8NC Nut**	**88341**	**7/8 Lock Washer**

13' MAIN FRAME

Serial numbers 441250 and up

The following parts 19, 20, 21 are service parts for serial numbers 441250 to 450761

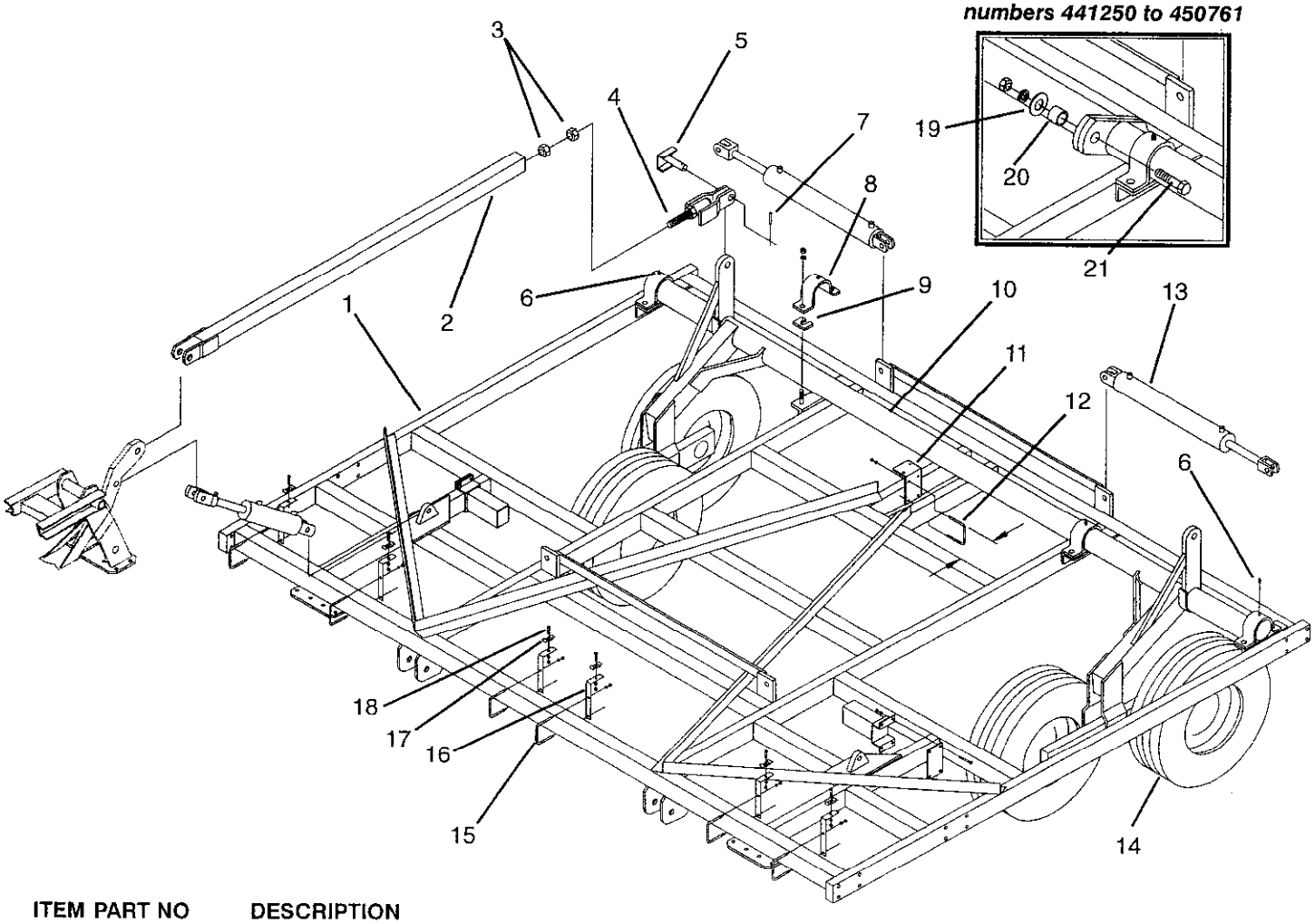

ITEM	PART NO	DESCRIPTION
1	56996	13' 5Bar Q5 Main Frame
2	55749	Center Adjust Tube
3	88622	1-1/4NC Jam Nut
4	54800	Clevis Adjust Rod
5	54689	Tube Pin
6	88263	1/8NPT Grease Fitting
7	42484	Cylinder Lock Pin
8	10399	Axle Cap
9	10176	Shim
10	66970	13' HD 5BQ5 Main Axle (Red) w/o Walker ***serial number 450762 & up***
		The following 3PC axles are service parts for serial numbers 441250 to 450761
	54586	Center Axle
	61845	Right HD 5BQ5 Main Axle Assy w/Walker
	61378	Right HD 5BQ5 Main Axle (Red) w/o Walker
	61844	Left HD 5BQ5 Main Axle Assy w/walker
	61377	Left HD 5BQ5 Main Axle (Red) w/o Walker
11	56536	Manifold Mount
12	88515	3/8NCx4x2-3/4 U-Bolt
13	51229	4x30 Hyd Cylinder

ITEM	PART NO	DESCRIPTION
14	16290	95Lx15 Tubeless Tire
	10498	15x8 Wheel Rim
	16287	Tubeless Tire
	30784	Valve Stem Assembly
	57906	31x13.50 8 Ply Tire assy (Optional)
	46714	15x10 Wheel Rim
	57907	31x13.50 8 Ply Tire
	57908	Valve Assembly
15	88514	3/8NCx4x3-3/4 U-Bolt
16	13270	Pole Tube Bracket
17	13215	Tube Clamp
18	88553	3/8NCx1-1/2 GR5 Bolt
19	88131	3/4 Flat Washer
20	12376	Bushing (.781IDx1-1/4ODx.625)
21	88404	3/4NCx2-1/2 GR5 Bolt

Note: Standard nuts and lock washers are not called out. Anything other than standard will be called out.

STANDARD NUTS AND LOCK WASHERS

88172	**1/4NC Nut**	**88262**	**1/4 Lock Washer**
88103	**3/8NC Nut**	**88362**	**3/8 Lock Washer**
88104	**1/2NC Nut**	**88303**	**1/2 Lock Washer**
88126	**5/8NC Nut**	**88129**	**5/8 Lock Washer**
88110	**3/4NC Nut**	**88130**	**3/4 Lock Washer**
88371	**7/8NC Nut**	**88341**	**7/8 Lock Washer**

13' MAIN FRAME

Serial Numbers 441249 & below

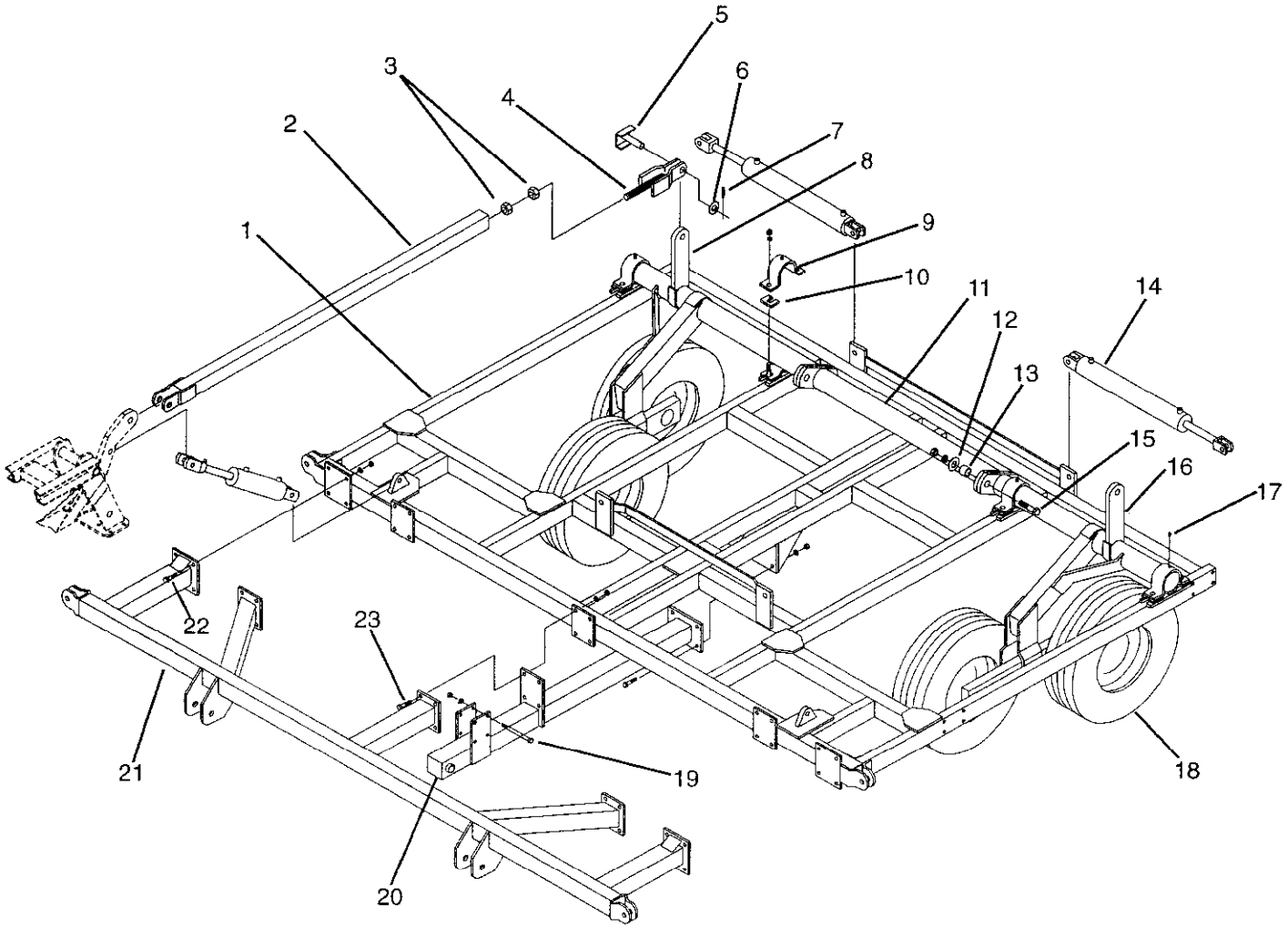

ITEM	PART NO	DESCRIPTION
1	54497	13' Main Frame
2	54796	Center Adjust Tube
3	88622	1-1/4NC Jam Nut
4	54800	Clevis Adjust Rod
5	54689	Tube Pin
6	88602	1-1/4 Flat Washer
7	42484	Cylinder Lock Pin
8	54592	Right Q5 Main Axle Assembly
	56888	Right Q5 Main Axle
9	10399	Axle Cap
10	10176	Shim
11	54586	Center Axle
12	88131	3/4 Flat Washer
13	12376	Bushing .781x1-1/4ODx.625
14	51229	4x30 Cylinder
15	88404	3/4NCx2-1/2 GR5 Bolt
16	54593	Left Q5 Main Axle Assembly
	56889	Left Q5 Main Axle
17	88263	1/8NPT Grease Fitting

ITEM	PART NO	DESCRIPTION
18	16290	95Lx15 Wheel Assembly
	10498	15x8 Wheel Rim
	16287	95lx15 Tubeless Tire
	30784	Valve Stem Assembly
19	88295	5/8NCx6 GR5 Bolt
20	54538	Center Pull Rod
21	54516	13FT Main Stub
22	88290	3/4NCx2 GR8 Bolt
23	88404	3/4NCx2-1/2 GR5 Bolt

Note: Standard nuts and lock washers are not called out. Anything other than standard will be called out.

STANDARD NUTS AND LOCK WASHERS

88172	**1/4NC Nut**	**88262**	**1/4 Lock Washer**
88103	**3/8NC Nut**	**88362**	**3/8 Lock Washer**
88104	**1/2NC Nut**	**88303**	**1/2 Lock Washer**
88126	**5/8NC Nut**	**88129**	**5/8 Lock Washer**
88110	**3/4NC Nut**	**88130**	**3/4 Lock Washer**
88371	**7/8NC Nut**	**88341**	**7/8 Lock Washer**

16' MAIN FRAME

Serial Numbers 441250 & Up

The following parts 20, 21 & 22 are service parts for serial numbers 441250 to 450860

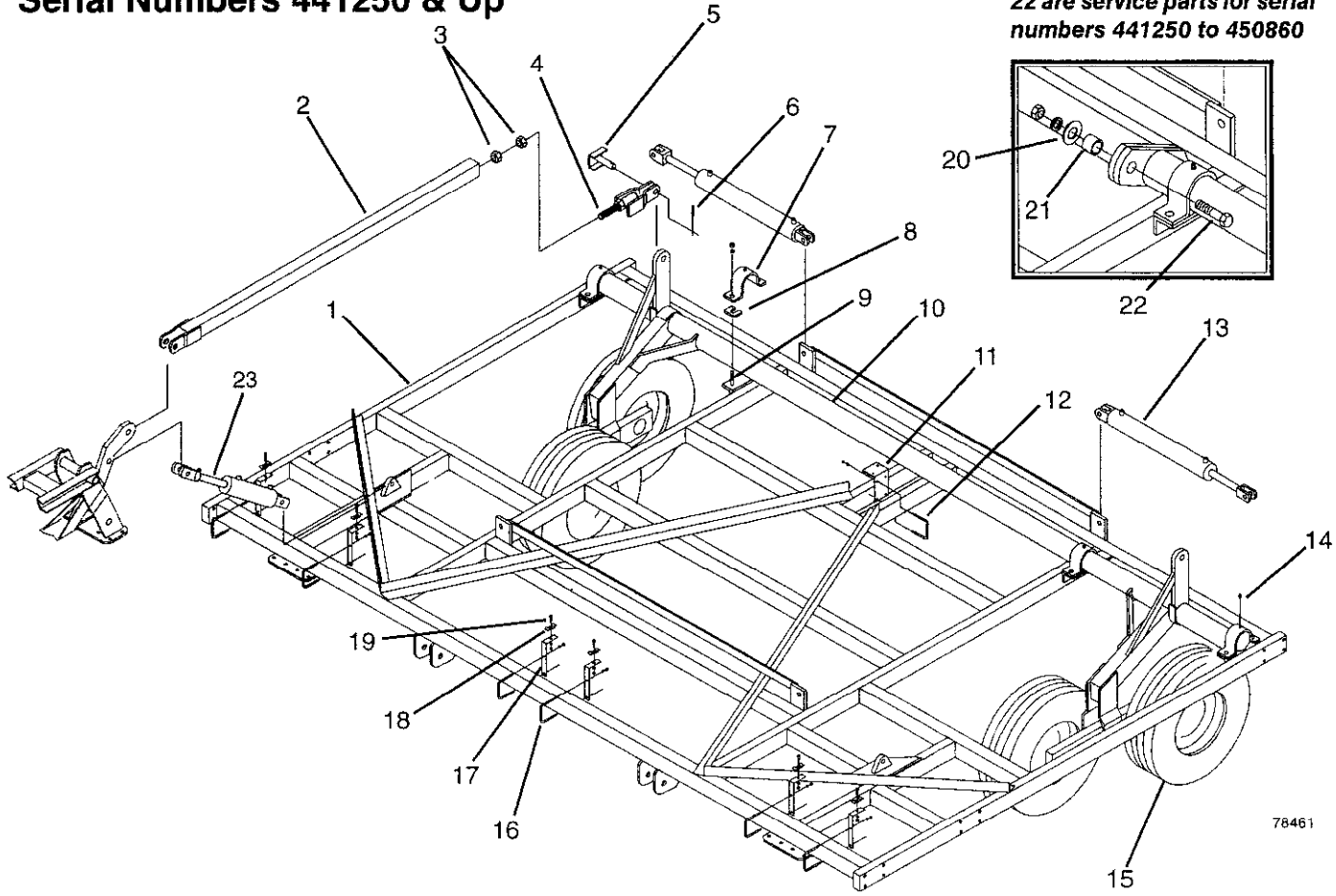

ITEM	PART NO	DESCRIPTION
1	56997	16' 5Bar Q5 Main Frame
2	55749	Center Adjust Tube
3	88622	1-1/4NC Jam Nut
4	54800	Clevis Adjust Rod
5	54689	Tube Pin
6	42484	Cylinder Lock Pin
7	10399	Axle Cap
8	10176	Shim
9	88495	7/8NCx2-1/2 GR5 Bolt
10	66965	13' HD 5BQ5 Main Axle (Red) w/o Walker ***serial numbers 450762 & up***

The following 3PC axles are service parts for serial numbers 441250 to 450761

	54995	Center Axle
	61845	Right HD 5BQ5 Main Axle Assy w/Walker
	61378	Right HD 5BQ5 Main Axle (Red) w/o Walker
	61844	Left HD 5BQ5 Main Axle Assy w/Walker
	61377	Left HD 5BQ5 Main Axle (Red) w/o Walker
11	56536	Manifold Mount
12	88515	3/8NCx4x2-3/4 U-Bolt
13	51229	4x30 Hyd Cylinder
14	88263	1/8NPT Grease Fitting

ITEM	PART NO	DESCRIPTION
15	16290	95Lx15 Tubeless Tire
	10498	15x8 Wheel Rim
	16287	Tubeless Tire
	30784	Valve Stem Assembly
16	88514	3/8NCx4x3-3/4 U-Bolt
17	13270	Pole Tube Bracket
18	13215	Tube Clamp
19	88553	3/8NCx1-1/2 GR5 Bolt
20	88131	3/4 Flat Washer
21	12376	Bushing (.781IDx1-1/4ODx.625)
22	88404	3/4NCx2-1/2 GR5 Bolt
23	42580	4x9.3 Top Bypasss Cylinder

Note: Standard nuts and lock washers are not called out. Anything other than standard will be called out.

STANDARD NUTS AND LOCK WASHERS

88172	**1/4NC Nut**	**88262**	**1/4 Lock Washer**
88103	**3/8NC Nut**	**88362**	**3/8 Lock Washer**
88104	**1/2NC Nut**	**88303**	**1/2 Lock Washer**
88126	**5/8NC Nut**	**88129**	**5/8 Lock Washer**
88110	**3/4NC Nut**	**88130**	**3/4 Lock Washer**
88371	**7/8NC Nut**	**88341**	**7/8 Lock Washer**

16' MAIN FRAME

Serial Numbers 441249 & Below

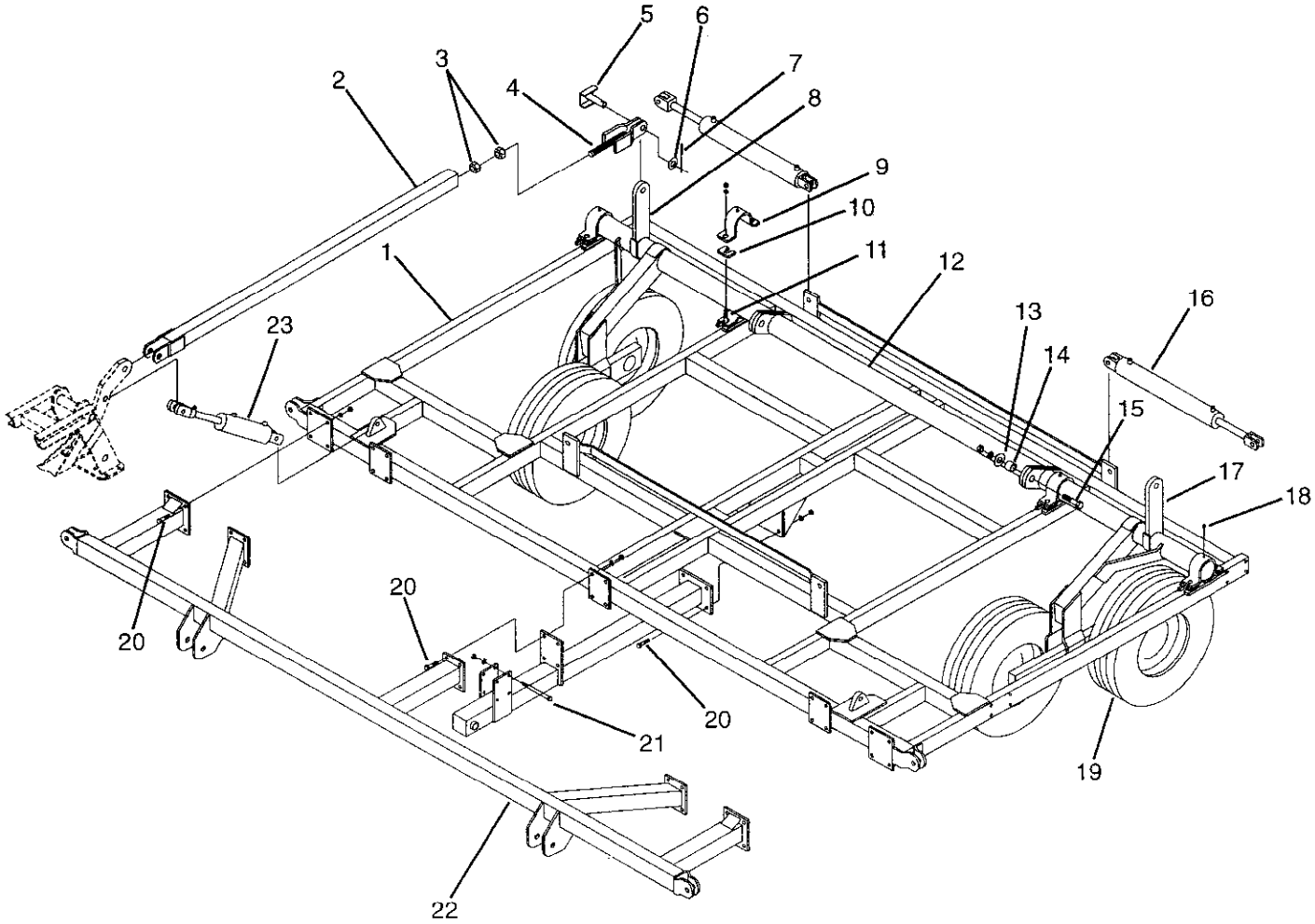

ITEM	PART NO	DESCRIPTION	ITEM	PART NO	DESCRIPTION
1	54982	16' Main Frame	14	12376	Bushing .781IDx1-1/4ODx.625
2	54796	Center Adjust Tube	15	88404	3/4NCx2-1/2 GR5 Bolt
3	88622	1-1/4NC Jam Nut	16	51229	4x30 Hyd Cylinder
4	54800	Clevis Adjust Rod	17	61843	Left Main Axle Assembly w/Walker
5	54689	Tube Pin		56889	Left Q5 Main Axle Assy w/o Walker
6	88602	1-1/4 Flat Washer	18	88263	1/8NPT Grease Fitting
7	42484	Cylinder Lock Pin	19	16290	95Lx15 Wheel Assembly
8	61842	Right Main Axle w/Walker		10498	15x8 Wheel Rim
	56888	Right Q5 Main Axle Assy w/o Walker		16287	95Lx15 Wheel Assembly
9	10399	Axle Cap		30784	Valve Stem Assembly
10	10176	Shim	20	88290	3/4NCx2 GR8 Bolt
11	88495	7/8NCx2-1/2 GR5 Bolt	21	88295	5/8NCx6 GR5 Bolt
12	54995	Center Tube	22	54986	16Ft. Main Frame Stub
13	88131	3/4 Flat Washer	23	42580	4x9.3 Top Bypasss Cylinder

11' FLOATING HITCH

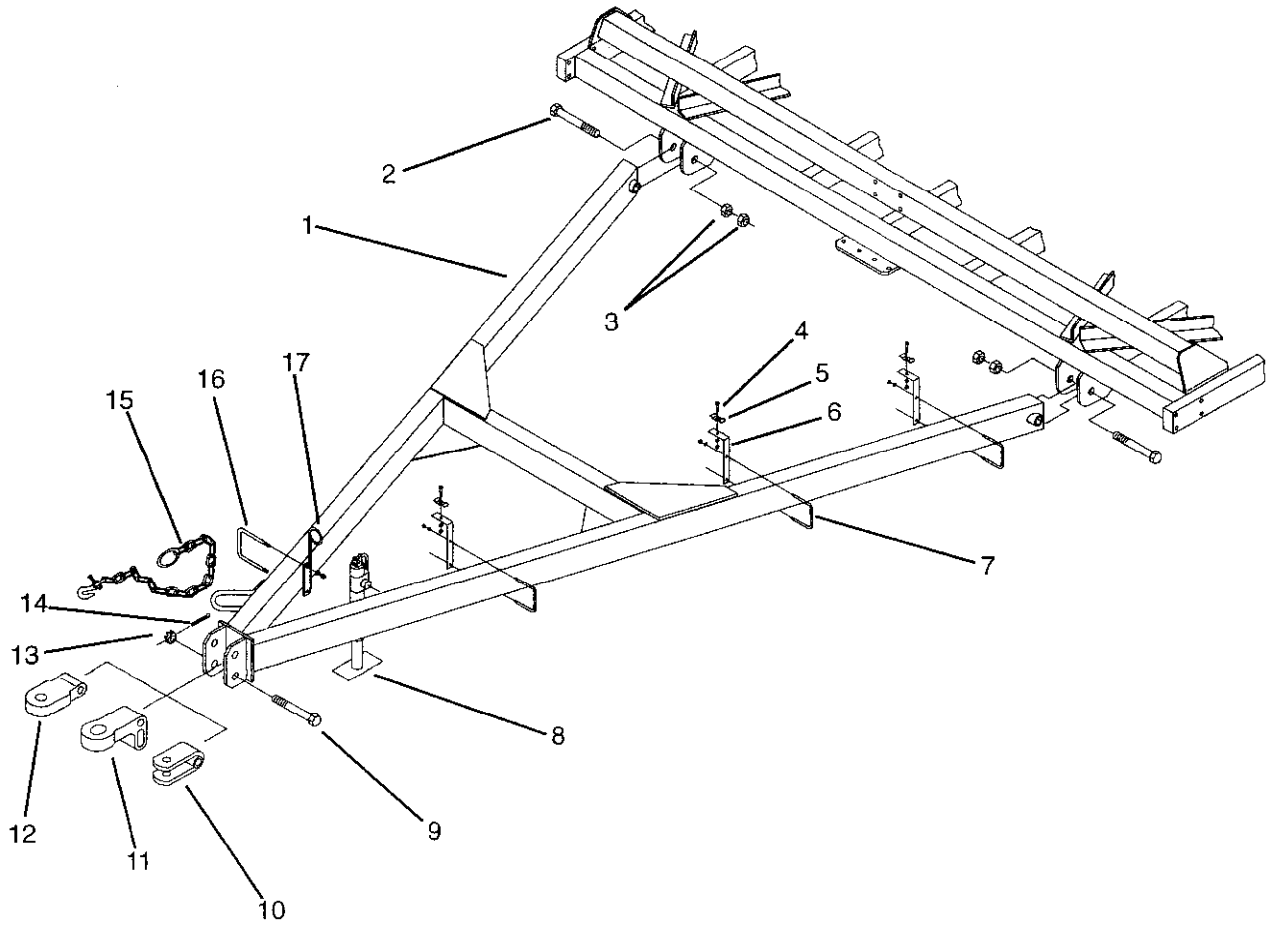

ITEM	PART NO	DESCRIPTION
1	66309	11' 5BQ5 Main Hitch
2	88427	1-1/4NCx8 GR5 Bolt
3	88622	1-1/4NC Jam Nut
4	88553	3/8NCx1-1/2 GR5 Bolt
5	13215	Tube Clamp
6	13270	Pole Tube Bracket
7	88514	3/8NCx4x3-3/4 U-Bolt
8	24415	Jack
9	11638	1-1/4NCx6-1/2 Hitch Bolt w/Hole
10	11364	Clevis Hitch
11	18236	Dual Cast Hitch
12	18237	Cast Hitch
13	88350	1-1/4NC Slotted Nut
14	88133	3/16x2 Cotter Pin
15	24459	Safety Chain
16	89069	3/8NCx5x4 U-Bolt
17	55838	Hose Bracket

13' & 16' FLOATING HITCH

Serial Numbers 441250 & Up

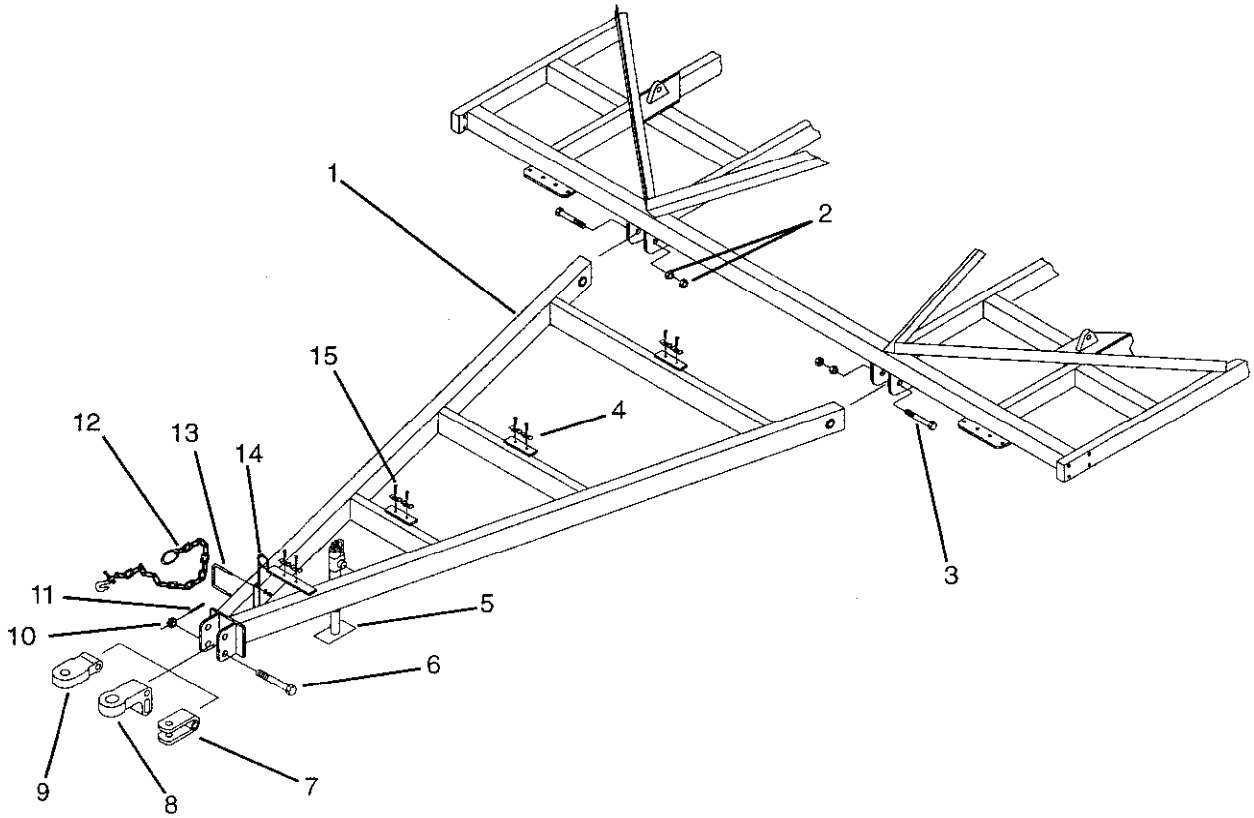

ITEM	PART NO	DESCRIPTION
1	55675	16' Floating Hitch (164" Long)
	55674	13' Floating Hitch (130" Long)
2	88622	1-1/4NC Jam Nut
3	88427	1-1/4NCx8 GR5 Bolt
4	13215	Tube Clamp
5	24415	Jack
6	11638	1-1/4NCx6-1/2 GR5 Hitch Bolt w/Hole
7	11364	Clevis Hitch
8	18236	Dual Cast Hitch
9	18237	Cast Hitch
10	88350	1-1/4NC Slotted Nut
11	88133	3/16x2 Cotter Pin
12	24459	Safety Chain
13	89069	3/8NCx5x4 U-Bolt
14	55838	Hose Bracket
15	88553	3/8NCx1-1/2 GR5 Bolt

FLOATING HITCH

Serial Numbers 441249 & Below

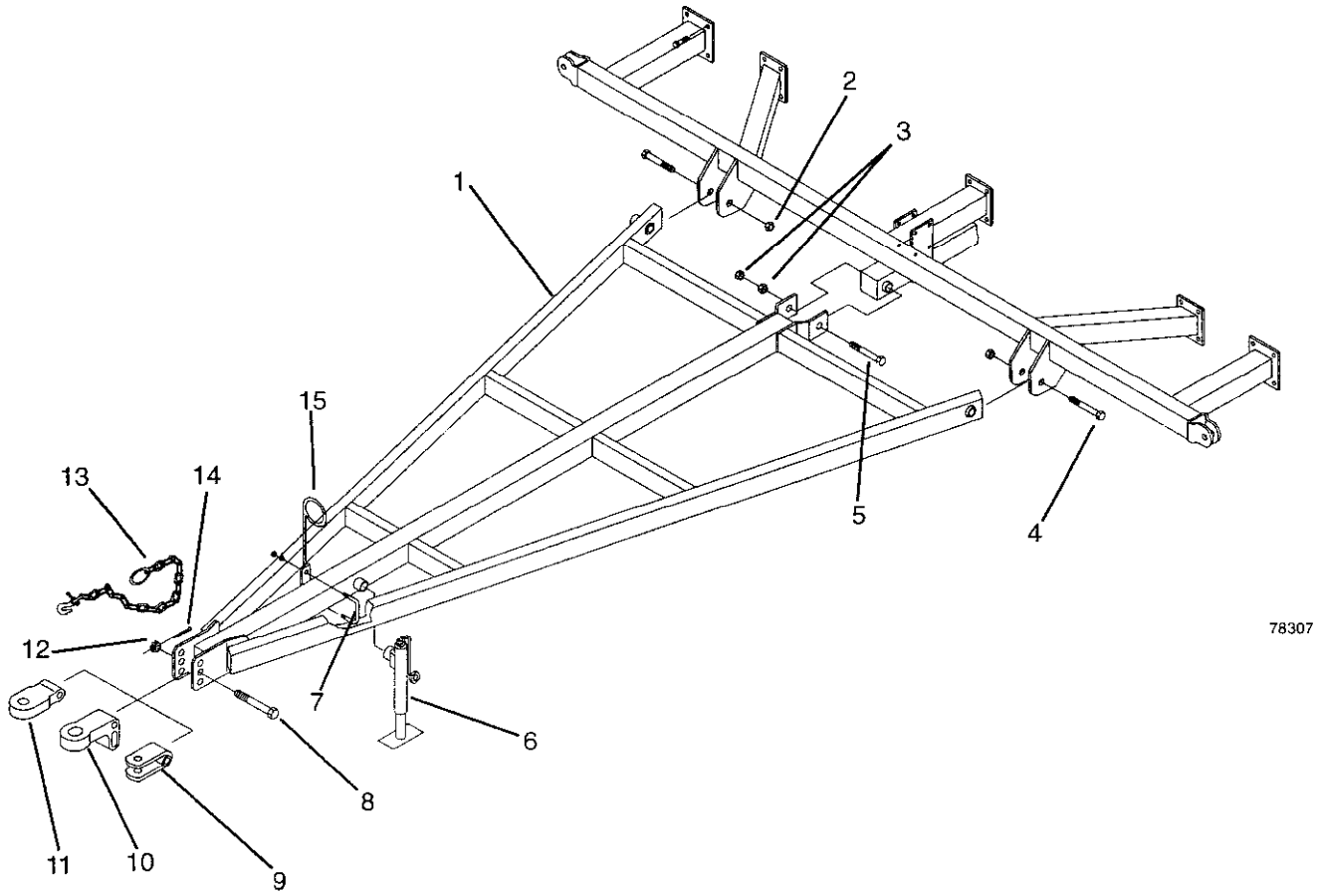

ITEM	PART NO	DESCRIPTION
1	54515	13' Floating Hitch Pole
	54988	16' Floating Hitch Pole
2	88340	1-1/4NC Lock Nut
3	88622	1-1/4NC Jam Nut
4	18214	1-1/4NCx6-1/2 GR5 Hitch Bolt
5	88427	1-1/4NCx8 GR5 Bolt
6	24415	Jack
7	88385	3/8NCx4x4-3/4 U-Bolt
8	11638	1-1/4NCx6-1/2 Hitch Bolt
9	11364	Clevis Hitch
10	18236	Dual cast Hitch
11	18237	Cast Hitch
12	88350	1-1/4NC Slotted Nut
13	24459	Safety Chain
14	88133	3/16x2 Cotter Pin
15	12724	Hose Bracket

2FT RIGID WING EXTENSION

Serial Number 441250 & Up

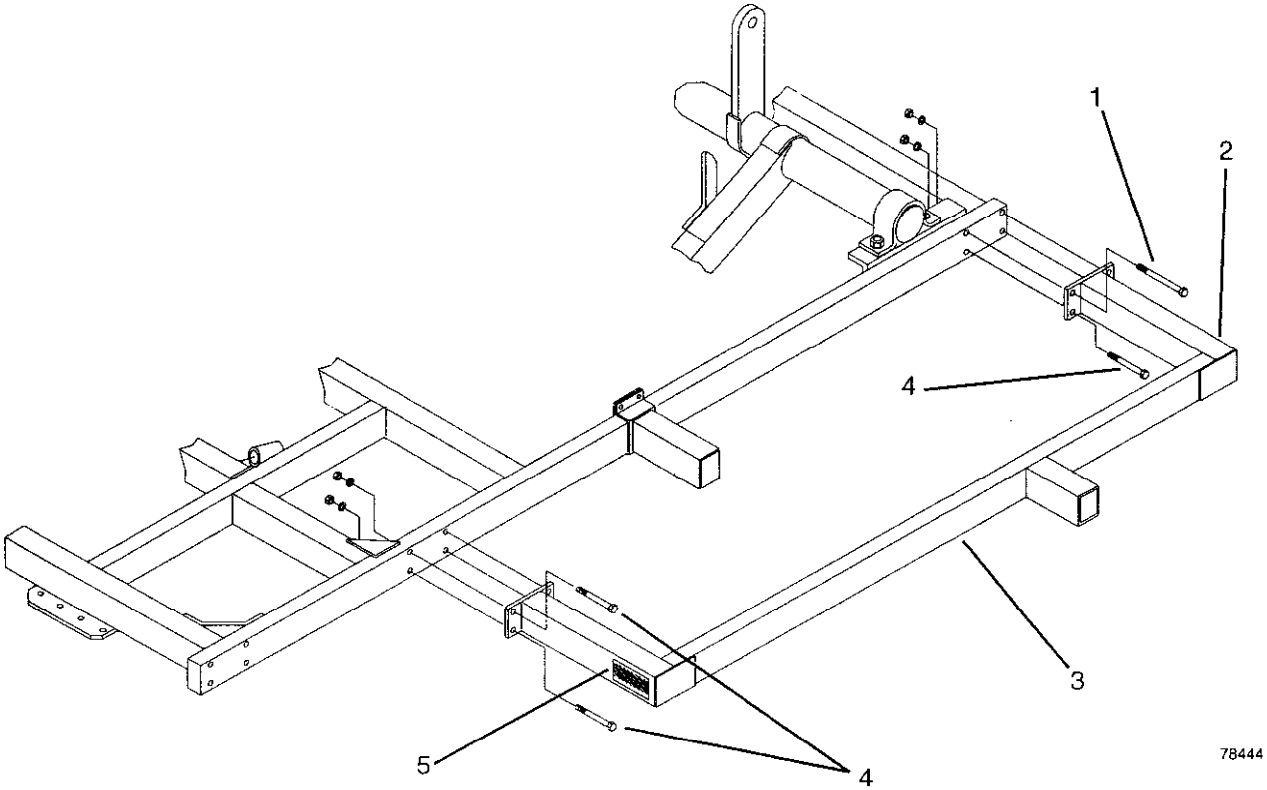

ITEM	PART NO	DESCRIPTION
1	88298	5/8NCx4 GR5 Bolt
2	22371	Red Reflector (To the back.)
3	56222	2Ft. Rigid Wing
4	88292	5/8NCx3-1/2 GR5 Bolt
5	22372	Amber Reflector (To the front.)

Note: Standard nuts and lock washers are not called out. Anything other than standard will be called out.

STANDARD NUTS AND LOCK WASHERS

88172	**1/4NC Nut**	**88262**	**1/4 Lock Washer**
88103	**3/8NC Nut**	**88362**	**3/8 Lock Washer**
88104	**1/2NC Nut**	**88303**	**1/2 Lock Washer**
88126	**5/8NC Nut**	**88129**	**5/8 Lock Washer**
88110	**3/4NC Nut**	**88130**	**3/4 Lock Washer**
88371	**7/8NC Nut**	**88341**	**7/8 Lock Washer**

2FT RIGID WING EXTENSION

Serial Numbers 441249 & Below

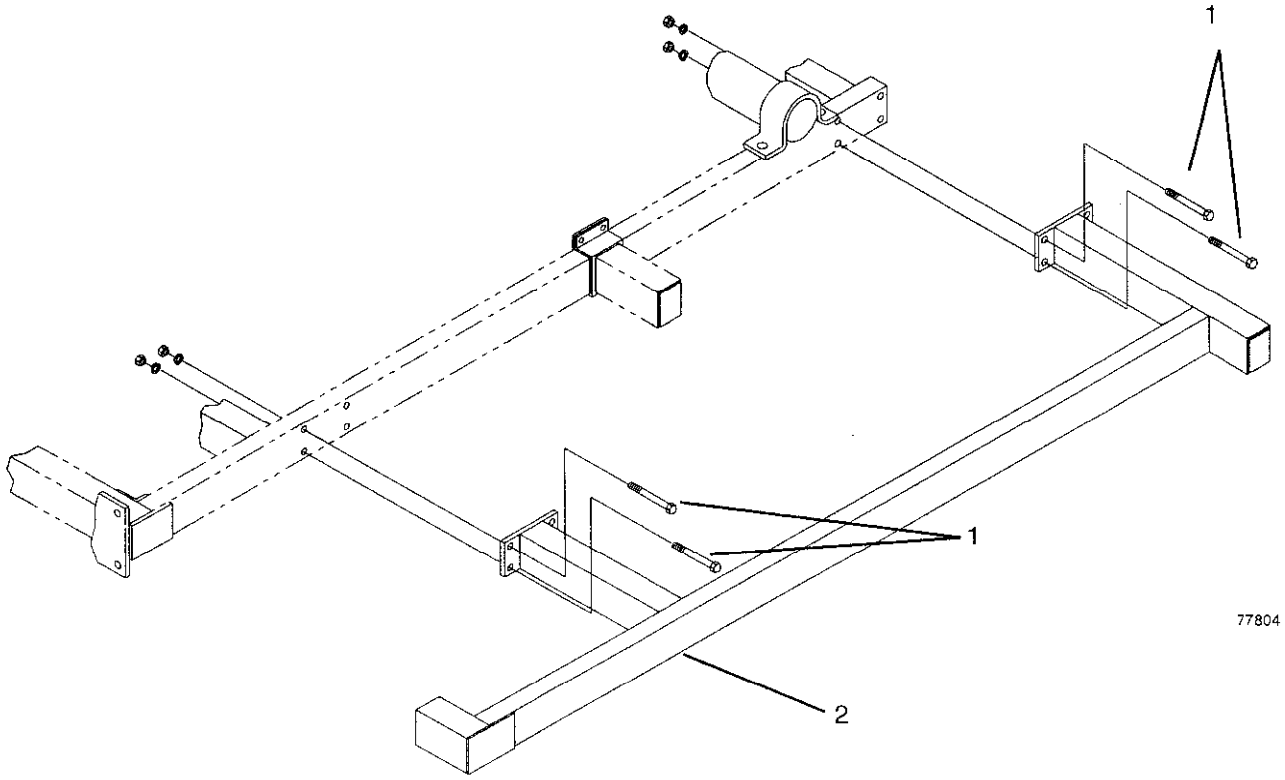

ITEM	PART NO	DESCRIPTION
1	88292	5/8NCx3-1/2 GR5 Bolt
2	49024	2Ft Rigid Stub

Note: Standard nuts and lock washers are not called out. Anything other than standard will be called out.

STANDARD NUTS AND LOCK WASHERS

88172	**1/4NC Nut**	**88262**	**1/4 Lock Washer**
88103	**3/8NC Nut**	**88362**	**3/8 Lock Washer**
88104	**1/2NC Nut**	**88303**	**1/2 Lock Washer**
88126	**5/8NC Nut**	**88129**	**5/8 Lock Washer**
88110	**3/4NC Nut**	**88130**	**3/4 Lock Washer**
88371	**7/8NC Nut**	**88341**	**7/8 Lock Washer**

7' WING

Serial Numbers 441250 & Up

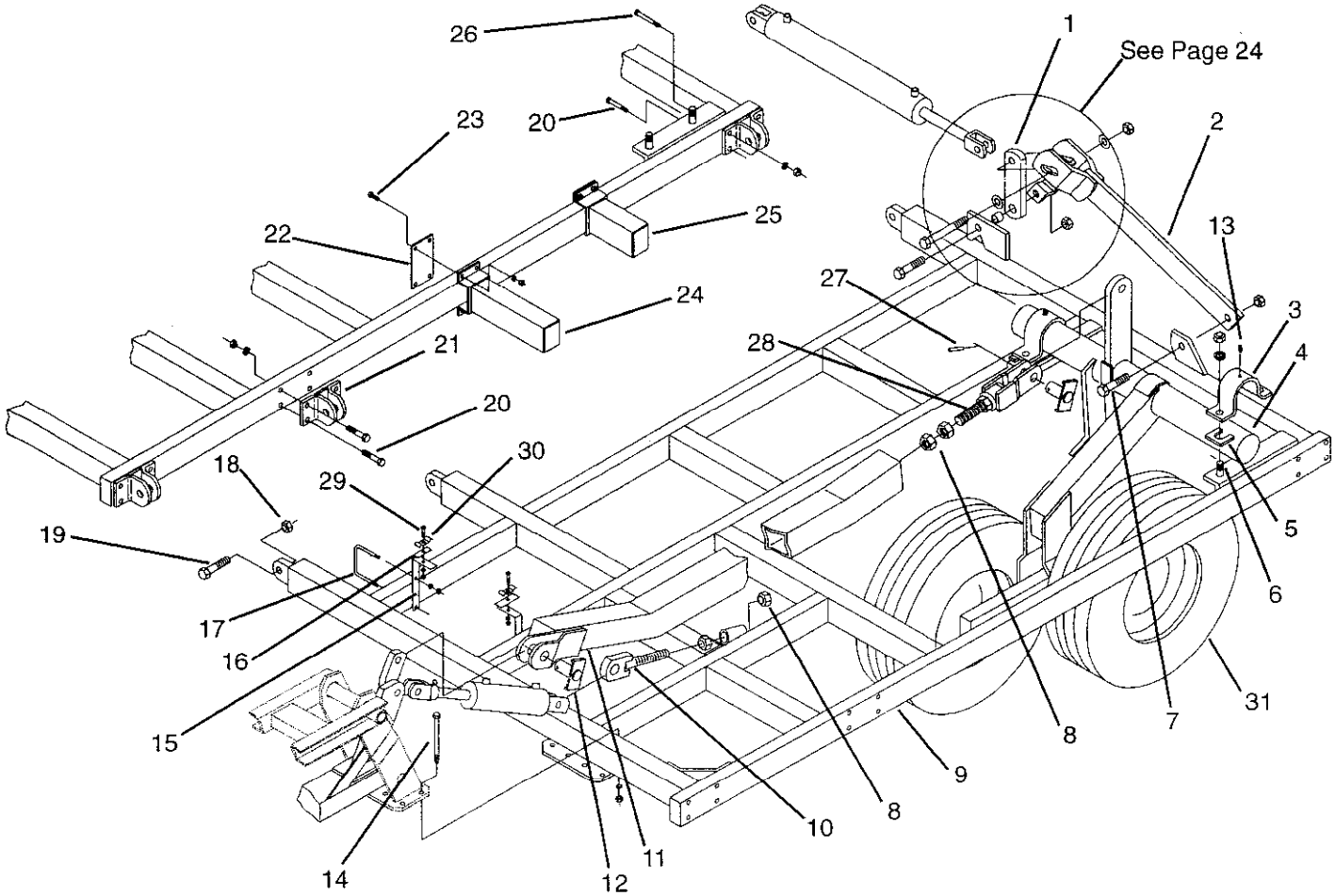

ITEM	PART NO	DESCRIPTION
1	48522	Wing Lift Link
2	61744	Left Wing Lift Assembly (Shown)
	61745	Right Wing Lift Assembly
3	10399	Axle Cap
4	61843	Left Wing Axle Assembly w/Walker
	61842	Right Wing Axle Assembly w/Walker
	56876	Right 5Bar Q5 Wing Axle w/o Walker
	56877	Left 5Bar Q5 Wing Axle w/o Walker
5	10176	Shim
6	88495	7/8NCx2-1/2 GR5 Bolt
7	88393	1NCx2-1/2 GR5 Bolt
8	88622	1-1/4NC Jam Nut
9	56998	Right 7' 5Bar Q5 Wing
	56999	Left 7' 5Bar Q5 Wing (Shown)
10	54621	Adjust Rod
11	55741	Left Wing Adjust Tube (Shown)
	55740	Right Wing Adjust Tube
12	54689	Tube Pin
13	88263	1/8NPT Grease Fitting
14	88293	3/4NCx6 GR5 Bolt
15	13270	Pole Tube Bracket
16	15543	Base Plate
17	88515	3/8NCx4x2-3/4 U-Bolt
18	88348	1NC Lock Nut
19	88447	1NCx3-1/2 GR5 Bolt

ITEM	PART NO	DESCRIPTION
20	88292	5/8NCx3-1/2 GR5 Bolt
21	48537	Wing Hinge
22	26817	Backing Plate
23	88475	1/2NCx1-1/2 GR5 Bolt
24	49025	12" Saddle Stub
25	26815	8" Saddle Stub
26	88298	5/8NCx4 GR5 Bolt
27	42484	Cylinder Lock Pin
28	54800	Clevis Adjust Rod
29	88553	3/8NCx1-1/2 GR5 Bolt
30	13215	Tube Clamp
31	16290	95Lx15 8Ply Wheel Assembly
	10498	15X8 Wheel Rim
	16287	95Lx15 Tubeless Tire 8Ply
	30784	Valve Stem Assembly

Note: Standard nuts and lock washers are not called out. Anything other than standard will be called out.

STANDARD NUTS AND LOCK WASHERS

88172	**1/4NC Nut**	**88262**	**1/4 Lock Washer**
88103	**3/8NC Nut**	**88362**	**3/8 Lock Washer**
88104	**1/2NC Nut**	**88303**	**1/2 Lock Washer**
88126	**5/8NC Nut**	**88129**	**5/8 Lock Washer**
88110	**3/4NC Nut**	**88130**	**3/4 Lock Washer**
88371	**7/8NC Nut**	**88341**	**7/8 Lock Washer**

7' WING

Serial Numbers 441249 & Below

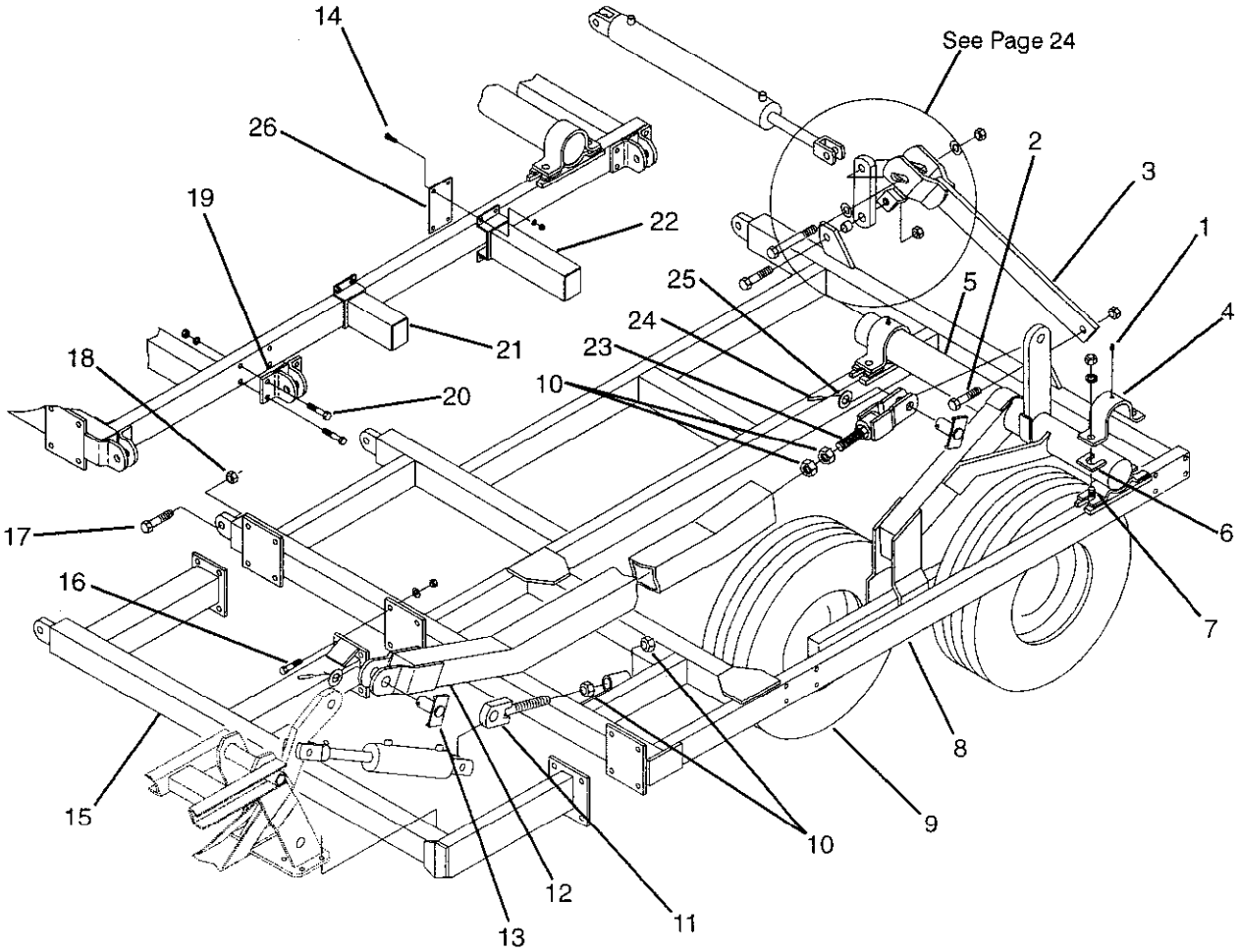

ITEM	PART NO	DESCRIPTION
1	88263	1/8NPT Grease Fitting
2	88293	3/4NCx6 GR5 Bolt
3	48518	Left Wing Lift Assembly (Shown)
	48519	Right Wing Lift Assembly
4	10399	Axle Cap
5	54597	Left Wing Axle Assembly w/Walker
	56887	Right Wing Axle Assembly w/Walker
	54598	Right 5Bar Q5 Wing Axle w/o Walker
	56886	Left 5Bar Q5 Wing Axle w/o Walker
6	10176	Shim
7	88495	7/8NCx2-1/2 GR5 Bolt
8	56998	Right 7' 5Bar Q5 Wing
	56999	Left 7' 5Bar Q5 Wing (Shown)
9	16290	95Lx15 8Ply Wheel Assembly
	10498	15X8 Wheel Rim
	16287	95Lx15 Tubeless Tire 8Ply
	30784	Valve Stem Assembly
10	88622	1-1/4NC Jam Nut
11	54621	Adjust Rod
12	54798	Left Wing Adjust Tube
13	54689	Tube Pin
14	88475	1/2NCx1-1/2 GR5 Bolt

ITEM	PART NO	DESCRIPTION
15	54589	7' Floating Wing Stub
16	88290	3/4NCx2 GR8 Bolt
17	88447	1NCx3-1/2 GR5 Bolt
18	88348	1NC Lock Nut
19	48537	Wing Hinge
20	88292	5/8NCx3-1/2 GR5 Bolt
21	26815	8" Saddle Stub
22	49025	12" Saddle Stub
23	54800	Clevis Adjust Rod
24	42484	Cylinder Lock Pin
25	88602	1-1/4 Flat Washer
26	26817	Backing Plate

Note: Standard nuts and lock washers are not called out. Anything other than standard will be called out.

STANDARD NUTS AND LOCK WASHERS

88172	**1/4NC Nut**	**88262**	**1/4 Lock Washer**
88103	**3/8NC Nut**	**88362**	**3/8 Lock Washer**
88104	**1/2NC Nut**	**88303**	**1/2 Lock Washer**
88126	**5/8NC Nut**	**88129**	**5/8 Lock Washer**
88110	**3/4NC Nut**	**88130**	**3/4 Lock Washer**
88371	**7/8NC Nut**	**88341**	**7/8 Lock Washer**

9' 4" WING

Serial Numbers 441250 & Up

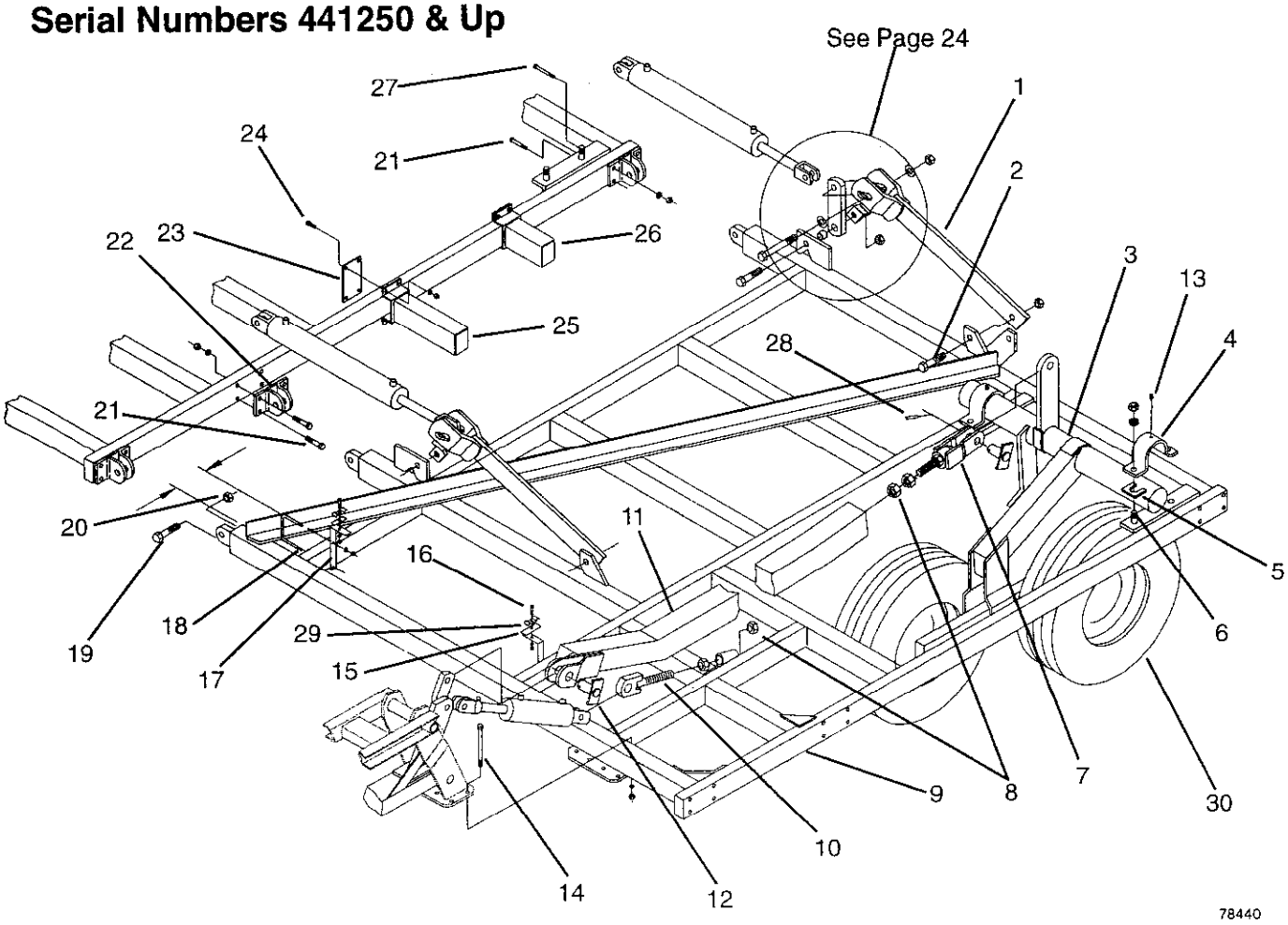

ITEM	PART NO	DESCRIPTION
1	61744	Left Wing Lift Assembly (Shown)
	61745	Right Wing Lift Assembly
2	88393	1NCx2-1/2 GR5 Bolt
3	61843	Left Wing Axle Assembly w/Walker
	61842	Right Wing Axle Assembly w/Walker
	56876	Right 5Bar Q5 Wing Axle w/o Walker
	56877	Left 5Bar Q5 Wing Axle w/o Walker
4	10399	Axle Cap
5	10176	Shim
6	88495	7/8NCx2-1/2 GR5 Bolt
7	54800	Clevis Adjust Rod
8	88622	1-1/4NC Jam Nut
9	57918	Right 9'4" 5Bar Q5 Wing
	57919	Left 9'4" 5Bar Q5 Wing (Shown)
10	54621	Adjust Rod
11	55741	Left Wing Adjust Tube (Shown)
	55740	Right Wing Adjust Tube
12	54689	Tube Pin
13	88263	1/8NPT Grease Fitting
14	88293	3/4NCx6 GR5 Bolt
15	15543	Base Plate
16	88553	3/8NCx1-1/2 GR5 Bolt
17	13270	Pole Tube Bracket
18	88515	3/8NCx4x2-3/4 U-Bolt
19	88447	1NCx3-1/2 GR5 Bolt

ITEM	PART NO	DESCRIPTION
20	88348	1NC Lock Nut
21	88292	5/8NCx3-1/2 GR5 Bolt
22	48537	Wing Hinge
23	26817	Backing Plate
24	88475	1/2NCx1-1/2 GR5 Bolt
25	49025	12" Saddle Stub
26	26815	8" Saddle Stub
27	88298	5/8NCx4 GR5 Bolt
28	42484	Cylinder Lock Pin
29	13215	Tube Clamp
30	16290	95Lx15 8Ply Wheel Assembly
	10498	15X8 Wheel Rim
	16287	95Lx15 Tubeless Tire 8Ply
	30784	Valve Stem Assembly

Note: Standard nuts and lock washers are not called out. Anything other than standard will be called out.

STANDARD NUTS AND LOCK WASHERS

88172	**1/4NC Nut**	**88262**	**1/4 Lock Washer**
88103	**3/8NC Nut**	**88362**	**3/8 Lock Washer**
88104	**1/2NC Nut**	**88303**	**1/2 Lock Washer**
88126	**5/8NC Nut**	**88129**	**5/8 Lock Washer**
88110	**3/4NC Nut**	**88130**	**3/4 Lock Washer**
88371	**7/8NC Nut**	**88341**	**7/8 Lock Washer**

9'4" WING

Serial Number 441249 & Below

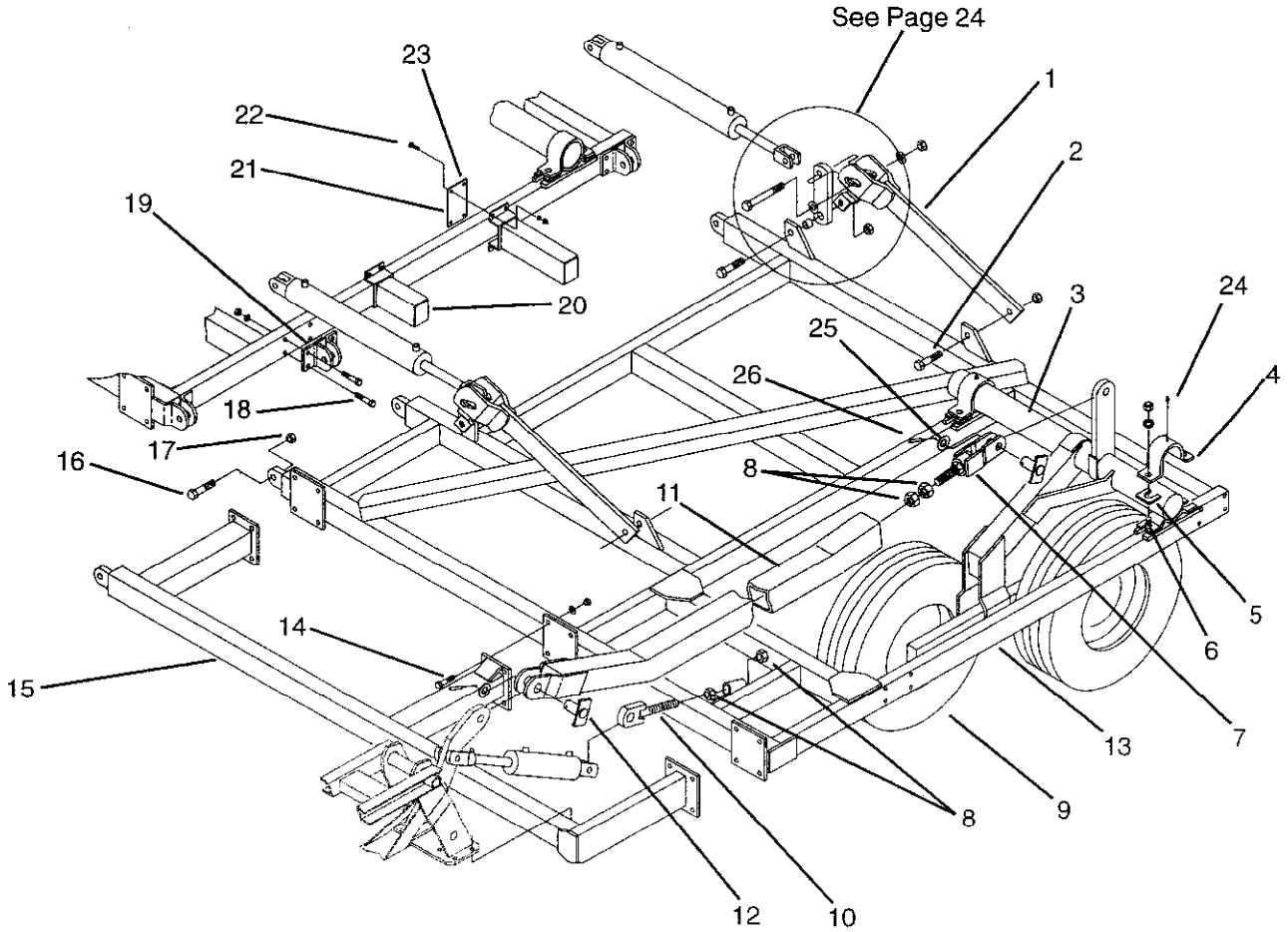

78306

ITEM	PART NO	DESCRIPTION
1	48518	Left Wing Lift Assembly (Shown)
	48519	Right Wing Lift Assembly
2	88393	1NCx2-1/2 GR5 Bolt
3	54597	Left Wing Axle Assembly w/Walker
	56887	Right Wing Axle Assembly w/Walker
	54598	Right 5Bar Q5 Wing Axle w/o Walker
	56886	Left 5Bar Q5 Wing Axle w/o Walker
4	10399	Axle Cap
5	10176	Shim
6	88495	7/8NCx2-1/2 GR5 Bolt
7	54800	Clevis Adjust Rod
8	88622	1-1/4NC Jam Nut
9	16290	95Lx15 8Ply Wheel Assembly
	10498	15x8 Wheel Rim
	16287	95Lx15 Tubeless Tire 8Ply
	30784	Valve Stem Assembly
10	54621	Adjust Rod
11	54798	Left Wing Adjust Tube
12	54689	Tube Pin
13	54495	9'4" Floating Wing Right
	54496	9'4" Floating Wing Left
14	88290	3/4NCx2 GR8 Bolt
15	54517	9'4" Floating Wing Stub
16	88447	1NCx3-1/2 GR5 Bolt
17	88348	1NC Lock Nut
18	88292	5/8NCx3-1/2 GR5 Bolt

ITEM	PART NO	DESCRIPTION
19	48537	Wing Hinge
20	26815	8" Saddle Stub
21	26817	Backing Plate
22	88475	1/2NCx1-1/2 GR5 Bolt
23	49025	12" Saddle Stub
24	88263	1/8NPT Grease Fitting
25	88602	1-1/4 Flat Washer
26	42484	Cylinder Lock Pin

Note: Standard nuts and lock washers are not called out. Anything other than standard will be called out.

STANDARD NUTS AND LOCK WASHERS

88172	**1/4NC Nut**	**88262**	**1/4 Lock Washer**
88103	**3/8NC Nut**	**88362**	**3/8 Lock Washer**
88104	**1/2NC Nut**	**88303**	**1/2 Lock Washer**
88126	**5/8NC Nut**	**88129**	**5/8 Lock Washer**
88110	**3/4NC Nut**	**88130**	**3/4 Lock Washer**
88371	**7/8NC Nut**	**88341**	**7/8 Lock Washer**

11'8" WING

Serial Numbers 441250 & Up

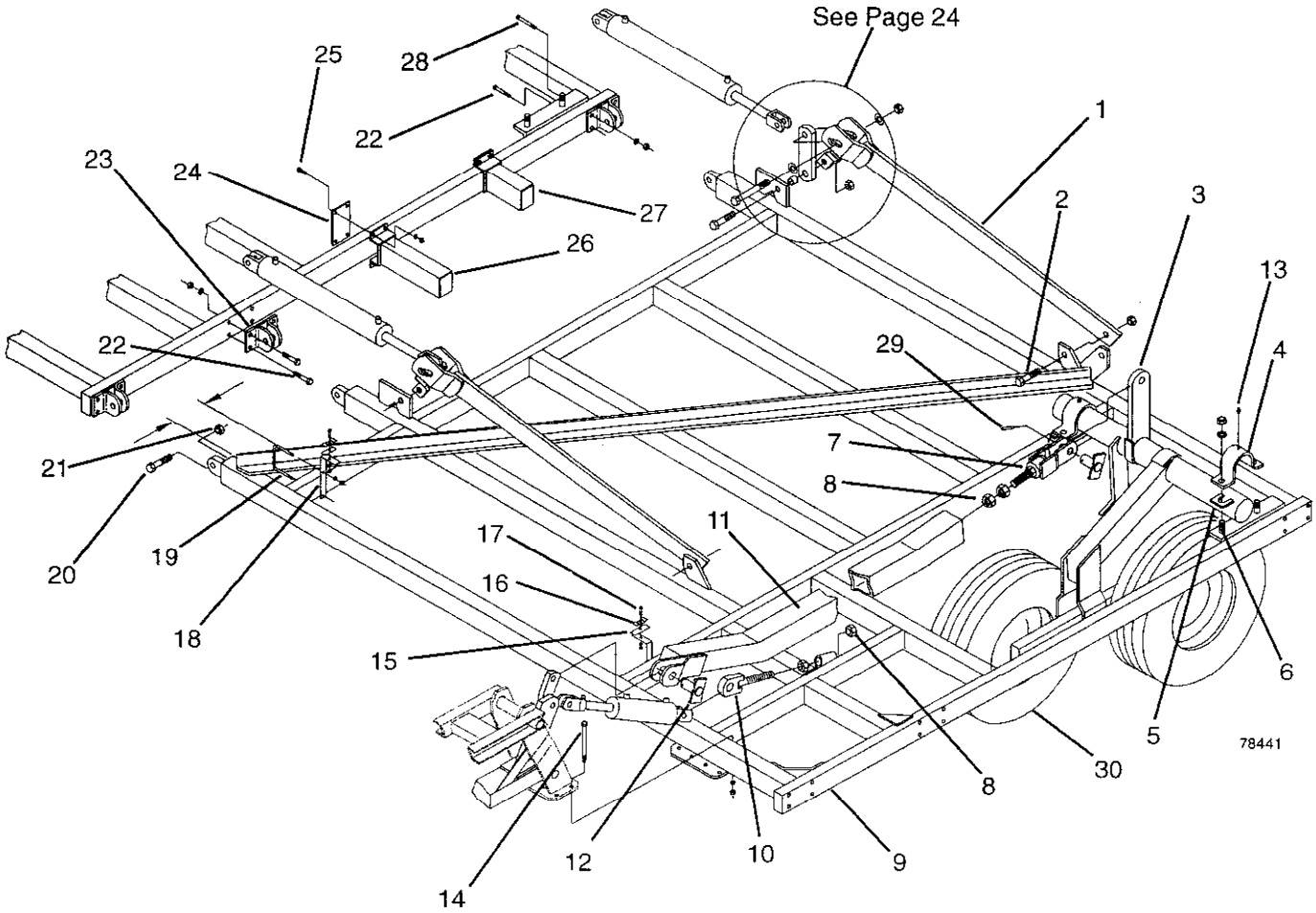

ITEM	PART NO	DESCRIPTION
1	61746	Left Wing Lift Assembly (Shown)
	61747	Right Wing Lift Assembly
2	88393	1NCx2-1/2 GR5 Bolt
3	61843	Left Wing Axle Assembly w/Walker
	61842	Right Wing Axle Assembly w/Walker
	56876	Right 5Bar Q5 Wing Axle w/o Walker
	56877	Left 5Bar Q5 Wing Axle w/o Walker
4	10399	Axle Cap
5	10176	Shim
6	88495	7/8NCx2-1/2 GR5 Bolt
7	54800	Clevis Adjust Rod
8	88622	1-1/4NC Jam Nut
9	57920	Right 11'8" 5Bar Q5 Wing
	57921	Left 11'8" 5Bar Q5 Wing (Shown)
10	54621	Adjust Rod
11	55741	Left Wing Adjust Tube (Shown)
	55740	Right Wing Adjust Tube
12	54689	Tube Pin
13	88263	1/8NPT Grease Fitting
14	88293	3/4NCx6 GR5 Bolt
15	15543	Base Plate
16	13215	Tube Clamp
17	88553	3/8NCx1-1/2 GR5 Bolt
18	13270	Pole Tube Bracket

ITEM	PART NO	DESCRIPTION
19	88515	3/8NCx4x2-3/4 U-Bolt
20	88447	1NCx3-1/2 GR5 Bolt
21	88348	1NC Lock Nut
22	88292	5/8NCx3-1/2 GR5 Bolt
23	48537	Wing Hinge
24	26817	Backing Plate
25	88475	1/2NCx1-1/2 GR5 Bolt
26	49025	12" Saddle Stub
27	26815	8" Saddle Stub
28	88298	5/8NCx4 GR5 Bolt
29	42484	Cylinder Lock Pin
30	16290	95Lx15 8Ply Wheel Assembly
	10498	15x8 Wheel Rim
	16287	95Lx15 Tubeless Tire 8Ply
	30784	Valve Stem Assembly

Note: Standard nuts and lock washers are not called out. Anything other than standard will be called out.

STANDARD NUTS AND LOCK WASHERS

88172	**1/4NC Nut**	**88262**	**1/4 Lock Washer**
88103	**3/8NC Nut**	**88362**	**3/8 Lock Washer**
88104	**1/2NC Nut**	**88303**	**1/2 Lock Washer**
88126	**5/8NC Nut**	**88129**	**5/8 Lock Washer**
88110	**3/4NC Nut**	**88130**	**3/4 Lock Washer**
88371	**7/8NC Nut**	**88341**	**7/8 Lock Washer**

11'8" WING

Serial Number 441249 & Below

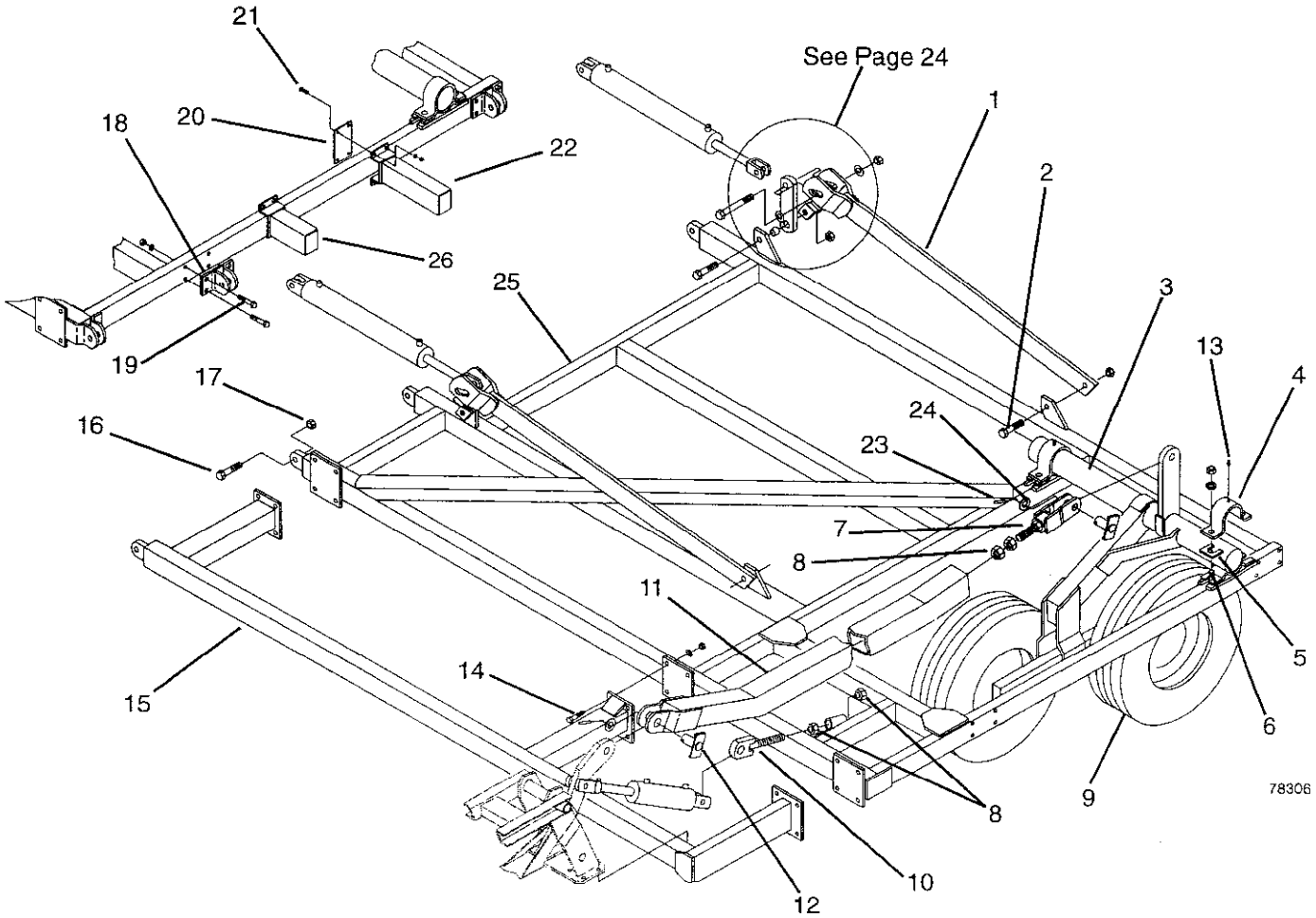

ITEM	PART NO	DESCRIPTION
1	48520	Left Wing Lift Assembly (Shown)
	48521	Right Wing Lift Assembly
2	88393	1NCx2-1/2 GR5 Bolt
3	54597	Left Wing Axle Assembly w/Walker
	56887	Right Wing Axle Assembly w/Walker
	54598	Right 5Bar Q5 Wing Axle w/o Walker
	56886	Left 5Bar Q5 Wing Axle w/o Walker
4	10399	Axle Cap
5	10176	Shim
6	88495	7/8NCx2-1/2 GR5 Bolt
7	54800	Clevis Adjust Rod
8	88622	1-1/4NC Jam Nut
9	16290	95Lx15 8Ply Wheel Assembly
	10498	15x8 Wheel Rim
	16287	95Lx15 Tubeless Tire
	30784	Valve Stem Assembly
10	54621	Adjust Rod
11	54798	Wing Adjust Tube (Shown)
12	54689	Tube Pin
13	88263	1/8NPT Grease Fitting
14	88290	3/4NCx2 GR5 Bolt

ITEM	PART NO	DESCRIPTION
15	54985	11'8" Floating Wing Stub
16	88447	1NCx3-1/2 GR5 Bolt
17	88348	1NC Lock Nut
18	48537	Wing Hinge
19	88292	5/8NCx3-1/2 GR5 Bolt
20	26817	Backing Plate
21	88475	1/2NCx1-1/2 GR5 Bolt
22	49025	12" Saddle Stub
23	42484	Cylinder Lock Pin
24	88602	1-1/4 Flat Washer
25	57980	Right 9'4" 5Bar Q5 Wing
	57981	Left 9'4" 5Bar Q5 Wing (Shown)
26	26815	8" Saddle Stub

Note: Standard nuts and lock washers are not called out. Anything other than standard will be called out.

STANDARD NUTS AND LOCK WASHERS

88172	**1/4NC Nut**	**88262**	**1/4 Lock Washer**
88103	**3/8NC Nut**	**88362**	**3/8 Lock Washer**
88104	**1/2NC Nut**	**88303**	**1/2 Lock Washer**
88126	**5/8NC Nut**	**88129**	**5/8 Lock Washer**
88110	**3/4NC Nut**	**88130**	**3/4 Lock Washer**
88371	**7/8NC Nut**	**88341**	**7/8 Lock Washer**

3FT OUTER WING

Serial Number 441250 & Up

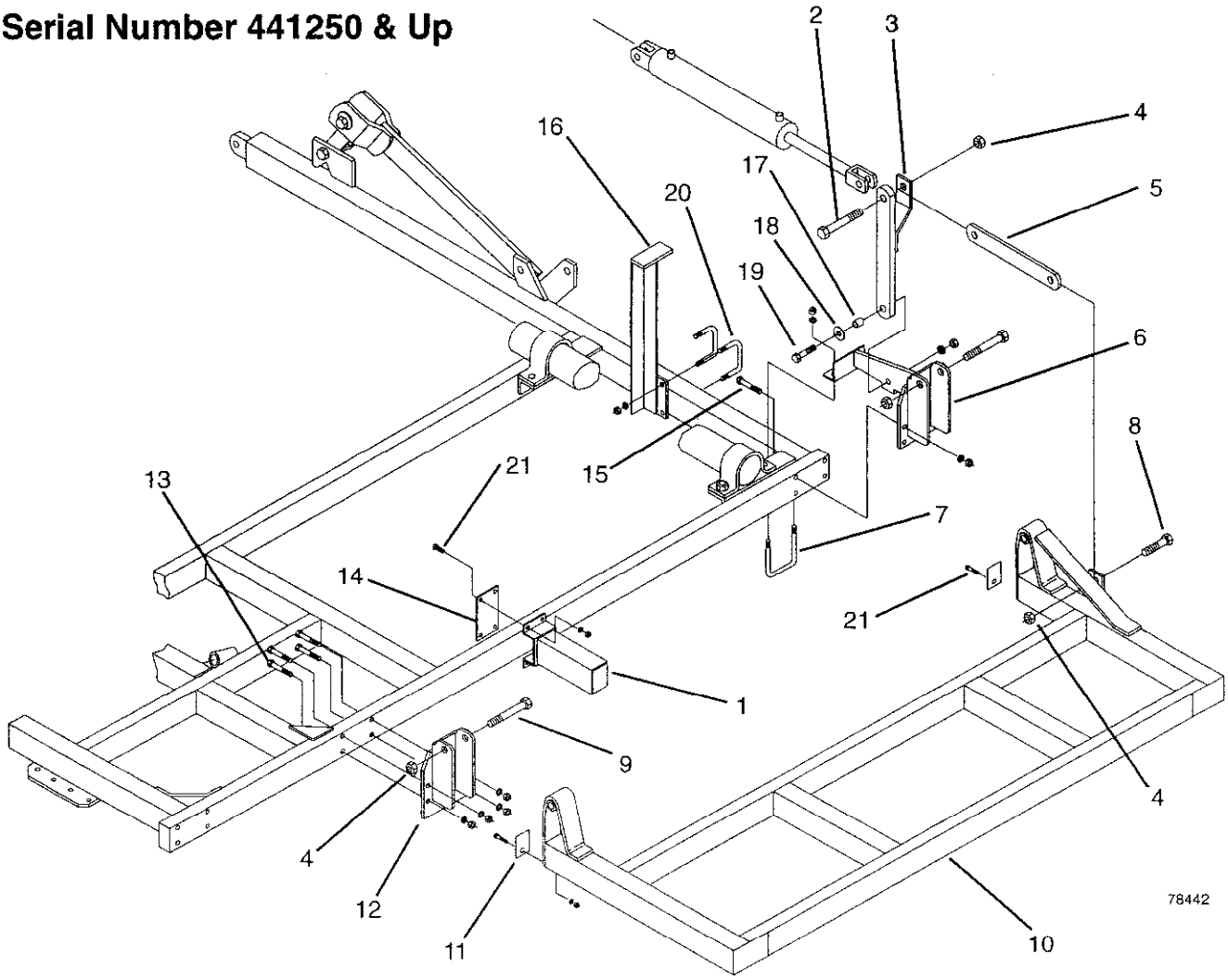

ITEM	PART NO	DESCRIPTION
1	26815	8" Saddle Stub
2	88312	1NCx5 GR5 Bolt
3	51465	Lift Linkage
4	88348	1NC Lock Nut
5	51456	Hinge Link
6	51461	Right Rear Hinge
	51462	Left Rear Hinge (Shown)
7	88503	5/8NCx3x5-1/4 U-Bolt
8	88399	1NCx3 GR5 Bolt
9	88264	1NCx6 GR5 Bolt
10	55714	Right 3' 5Bar Q5 Wing
	55715	Left 3' 5Bar Q5 Wing
11	51469	Shim (16Ga x 2-1/4x 4)
12	55772	Front Hinge
13	88292	5/8NCx3-1/2 GR5 Bolt
14	26817	Backing Plate

ITEM	PART NO	DESCRIPTION
15	88298	5/8NCx4 GR5 Bolt
16	55758	Wing Rest
17	51468	Bushing (.782IDx1"ODx1.06)
18	88131	3/4 Flat Washer
19	88291	3/4NCx3 GR5 Bolt
20	88453	5/8NCx4x4-1/2 U-Bolt
21	88475	1/2NCx1-1/2 GR5 Bolt

Note: Standard nuts and lock washers are not called out. Anything other than standard will be called out.

STANDARD NUTS AND LOCK WASHERS

88172	**1/4NC Nut**	**88262**	**1/4 Lock Washer**
88103	**3/8NC Nut**	**88362**	**3/8 Lock Washer**
88104	**1/2NC Nut**	**88303**	**1/2 Lock Washer**
88126	**5/8NC Nut**	**88129**	**5/8 Lock Washer**
88110	**3/4NC Nut**	**88130**	**3/4 Lock Washer**
88371	**7/8NC Nut**	**88341**	**7/8 Lock Washer**

3FT OUTER WING

Serial Number 441249 & Below

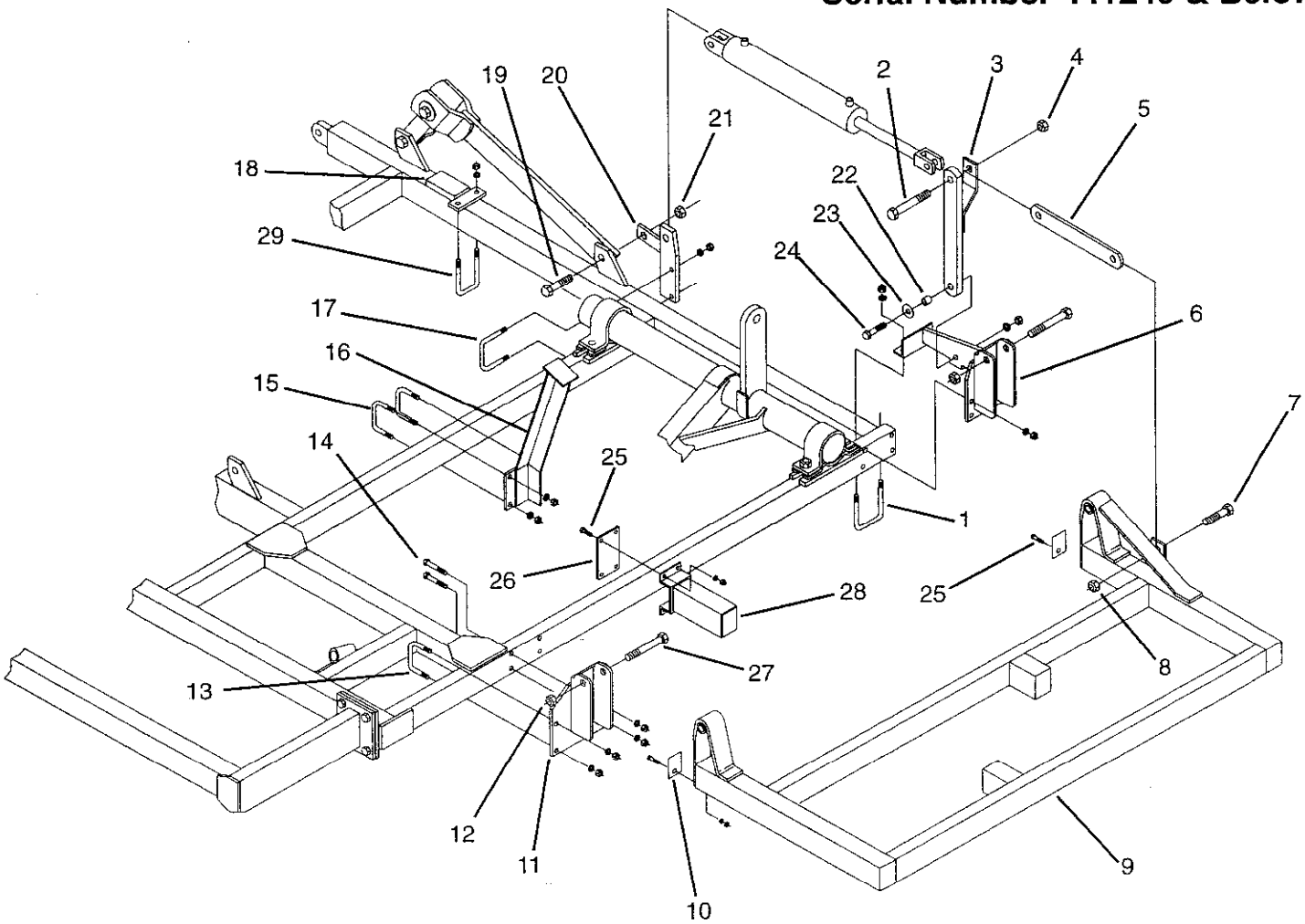

ITEM	PART NO	DESCRIPTION
1	88503	5/8NCx3x5-1/4 U-Bolt
2	88312	1NCx5 GR5 Bolt
3	51465	Lift Linkage
4	88348	1NC Lock Nut
5	51456	Hinge Link
6	51461	Right Rear Hinge
	51462	Left Rear Hinge (Shown)
7	88399	1NCx3 GR5 Bolt
8	88348	1NC Lock Nut
9	51454	Right 3' 5Bar Q5 Wing
	51455	Left 3' 5Bar Q5 Wing
10	51469	Shim (16Ga x 2-1/4x 4)
11	55283	Left Front Hinge (Shown)
	55282	Rifgt Front Hinge
12	88348	1NC Lock Nut
13	88388	5/8NCx4x3-1/4 U-Bolt
14	88292	5/8NCx3-1/2 GR5 Bolt
15	88388	5/8NCx4x3-1/4 U-Bolt
16	53098	Ouer Wing Rest
17	88501	5/8NCx4x4-1/4 U-Bolt
18	51931	Wing Spacer (Use w/3' & 5' Outer Wing on 13' MF w/11'8" wings)

ITEM	PART NO	DESCRIPTION
19	88399	1NCx3 GR5 Bolt
20	51460	Left Anchor
	51459	Right Anchor
21	88348	1NC Lock Nut
22	51468	Bushing (.782IDx1"ODx1.06)
23	88131	3/4 Flat Washer
24	88291	3/4NCx3 GR5 Bolt
25	88475	1/2NCx1-1/2 GR5 Bolt
26	26817	Backing Plate
27	88264	1NCx6 GR5 Bolt
28	26815	8" Saddle Stub

Note: Standard nuts and lock washers are not called out. Anything other than standard will be called out.

STANDARD NUTS AND LOCK WASHERS

88172	**1/4NC Nut**	**88262**	**1/4 Lock Washer**
88103	**3/8NC Nut**	**88362**	**3/8 Lock Washer**
88104	**1/2NC Nut**	**88303**	**1/2 Lock Washer**
88126	**5/8NC Nut**	**88129**	**5/8 Lock Washer**
88110	**3/4NC Nut**	**88130**	**3/4 Lock Washer**
88371	**7/8NC Nut**	**88341**	**7/8 Lock Washer**

5FT OUTER WING

Serial Numbers 441250 & Up

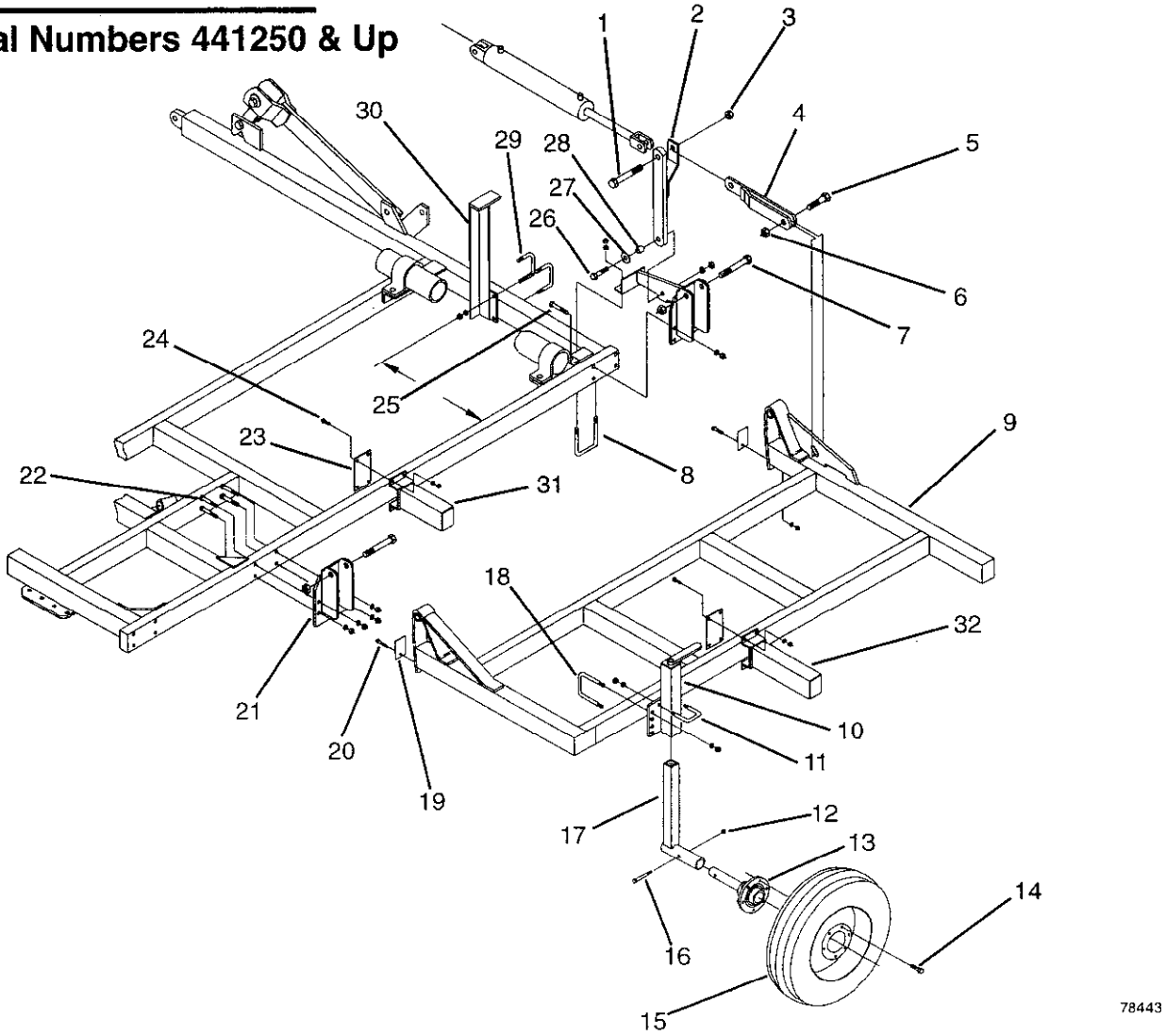

ITEM	PART NO	DESCRIPTION
1	88312	1NCx5 GR5 Bolt
2	51465	Lift Linkage
3	88348	1NC Lock Nut
4	51472	Lift Linkage
5	88399	1NCx3 GR5 Bolt
6	88348	1NC Lock Nut
7	51461	Right Rear Hinge
	51462	Left Rear Hinge (Shown)
8	88503	5/8NCx3x5-1/4 U-Bolt
9	55717	Right 5' 5Bar Q5 Wing
	55718	Left 5' 5Bar Q5 Wing
10	15485	Top Adjustment Assembly
11	88311	5/8NCx2-1/2x3-3/4 U-Bolt
12	88304	1/2NF Lock Nut
13	41233	1-3/4 Hub & Spindle
14	88142	1/2NFx1 90 Wheel Bolt
15	13142	95Lx15 Wheel Assembly
	10236	15x6 Wheel Rim
	16287	95Lx15 Tubeless Tire
	30784	Valve Stem
16	88313	1/2NFx3 GR5 Bolt
17	26774	Gauge Wheel Leg
18	88388	5/8NCx4x3-1/4 U-Bolt
19	51469	Shim (16GAx2-1/2x4)

ITEM	PART NO	DESCRIPTION
20	88475	1/2NCx1-1/2 GR5 Bolt
21	55772	Front Hinge
22	88292	5/8NCx3-1/2 GR5 Bolt
23	26817	Backing Plate
24	88475	1/2NCx1-1/2 GR5 Bolt
25	88298	5/8NCx4 GR5 Bolt
26	88291	3/4NCx3 GR5 Bolt
27	88131	3/4 Flat Washer
28	51468	Bushing (.782IDx1"ODx1.06)
29	88453	5/8NCx4x4-1/2 U-Bolt
30	55758	Wing Rest
31	26815	8" Saddle Stub
32	49025	12" Saddle Stub

Note: Standard nuts and lock washers are not called out. Anything other than standard will be called out.

STANDARD NUTS AND LOCK WASHERS

88172	**1/4NC Nut**	**88262**	**1/4 Lock Washer**
88103	**3/8NC Nut**	**88362**	**3/8 Lock Washer**
88104	**1/2NC Nut**	**88303**	**1/2 Lock Washer**
88126	**5/8NC Nut**	**88129**	**5/8 Lock Washer**
88110	**3/4NC Nut**	**88130**	**3/4 Lock Washer**
88371	**7/8NC Nut**	**88341**	**7/8 Lock Washer**

5FT OUTER WING

Serial Numbers 441249 & Below

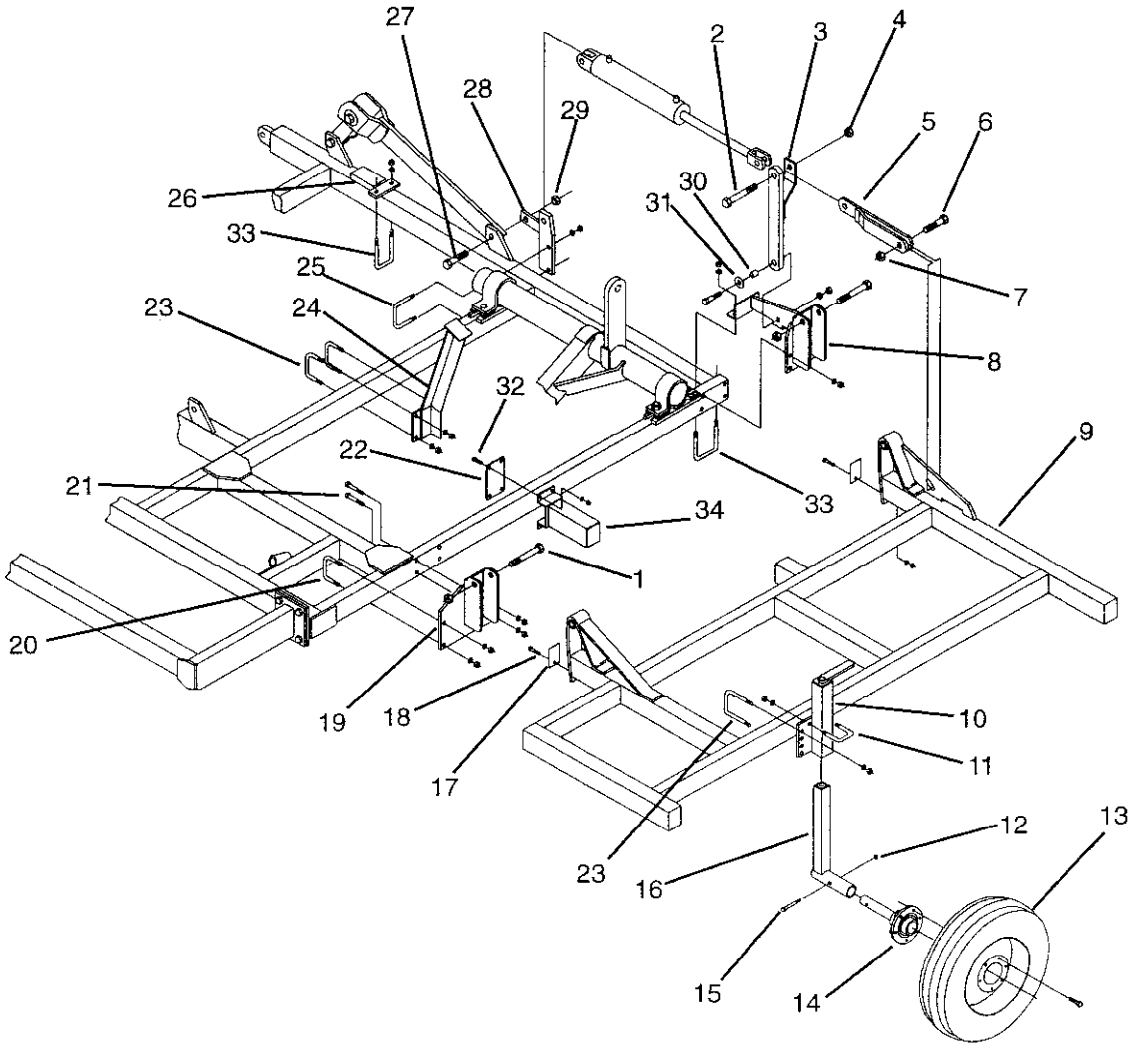

78357

ITEM	PART NO	DESCRIPTION
1	88264	1NCx6 GR5 Bolt
2	88312	1NCx5 GR5 Bolt
3	51465	Lift Linkage
4	88348	1NC Lock Nut
5	51472	Lift Linkage
6	88399	1NCx3 GR5 Bolt
7	88348	1NC Lock Nut
8	51461	Right Rear Hinge
	51462	Left Rear Hinge (Shown)
9	51466	Right 5' 5Bar Q5 Wing
	51467	Left 5' 5Bar Q5 Wing
10	15485	Top Adjustment Assembly
11	88311	5/8NCx2-1/2x3-3/4 U-Bolt
12	88304	1/2NF Lock Nut
13	13142	95Lx15 Wheel Assembly
	10236	15x6 Wheel Rim
	16287	95Lx15 Tubeless Tire
	30784	Valve Stem
14	41233	1-3/4 Hub & Spindle
15	88313	1/2NFx3 GR5 Bolt
16	26774	Gauge Wheel Leg
17	51469	Shim (16GAx2-1/2x4)

ITEM	PART NO	DESCRIPTION
18	88475	1/2NCx1-1/2 GR5 Bolt
19	55282	Right Front Hinge
	55283	Left Front Hinge
20	88388	5/8NCx4x3-1/4 U-Bolt
21	88292	5/8NCx3-1/2 GR5 Bolt
22	26817	Backing Plate
23	88388	5/8NCx4x3-1/4 U-Bolt
24	51656	Outer Wing Rest
25	88501	5/8NCx4x4-1/4 U-Bolt
26	51931	Wing Spacer
		(Used w/3' & 5' Outer wings on 13' MF w/11'8" wings)
27	88399	1NCx3 GR5 Bolt
28	51460	Left Anchor
	51459	Right Anchor
29	88348	1NC Lock Nut
30	51468	Bushing (.782IDx1"ODx1.06)
31	88131	3/4 Flat Washer
32	88475	1/2NCx1-1/2 GR5 Bolt
33	88503	5/8NCx3x5-1/4 U-Bolt
34	26815	8" Saddle Stub

WING LIFT LINK ASSEMBLY - ALL WINGS

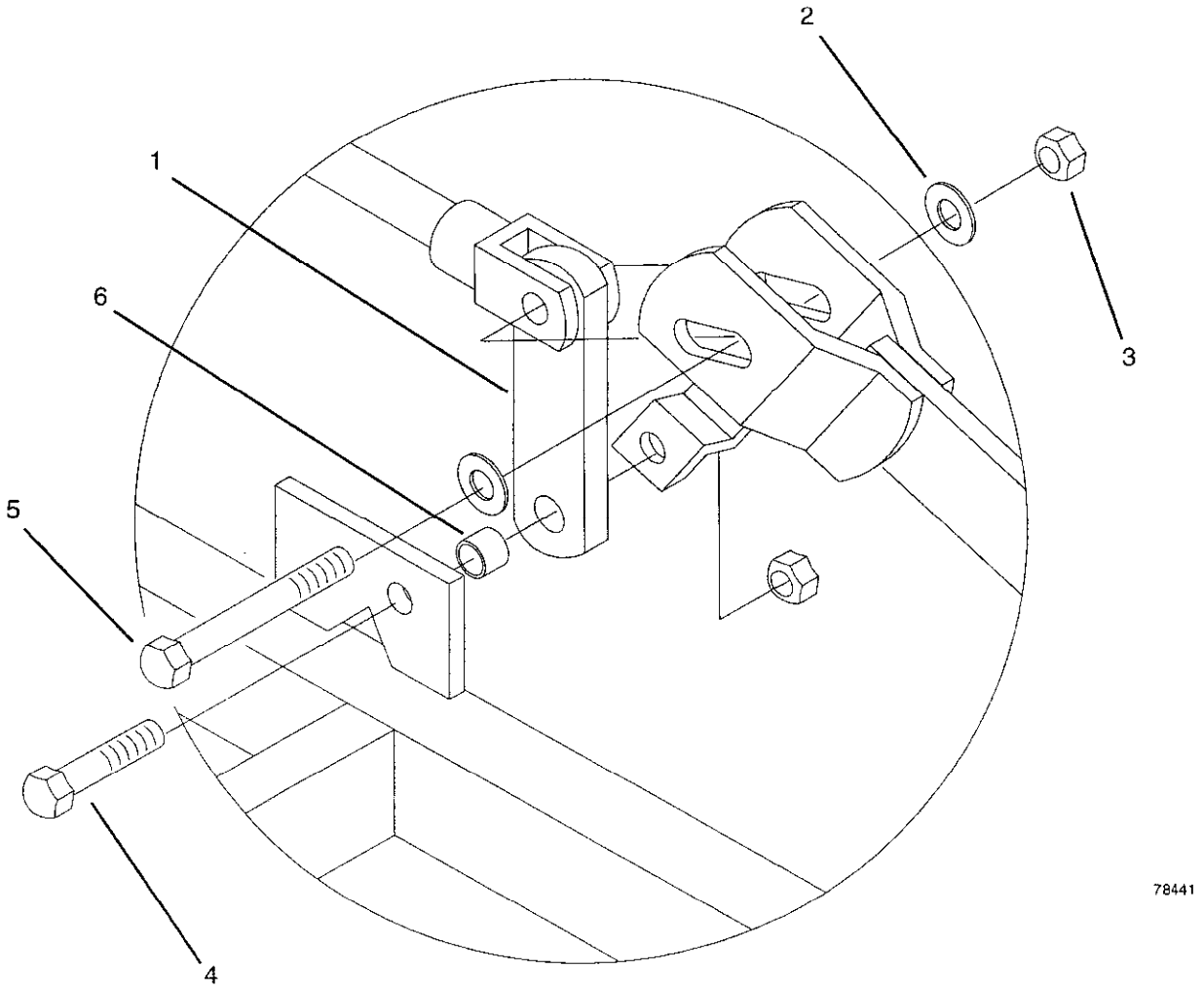

ITEM	PART NO	DESCRIPTION
1	48522	Wing Lift Link
2	88196	1" Flat Washer
3	89075	1NC Lock Nut
4	88447	1NCx3-1/2 GR5 Bolt
5	88312	1NCx5 GR5 Bolt
6	48523	Wing Lift Bushing 1.032IDx1-1/4ODx1.06

Note: Standard nuts and lock washers are not called out. Anything other than standard will be called out.

STANDARD NUTS AND LOCK WASHERS

88172	**1/4NC Nut**	**88262**	**1/4 Lock Washer**
88103	**3/8NC Nut**	**88362**	**3/8 Lock Washer**
88104	**1/2NC Nut**	**88303**	**1/2 Lock Washer**
88126	**5/8NC Nut**	**88129**	**5/8 Lock Washer**
88110	**3/4NC Nut**	**88130**	**3/4 Lock Washer**
88371	**7/8NC Nut**	**88341**	**7/8 Lock Washer**

SADDLE STUB

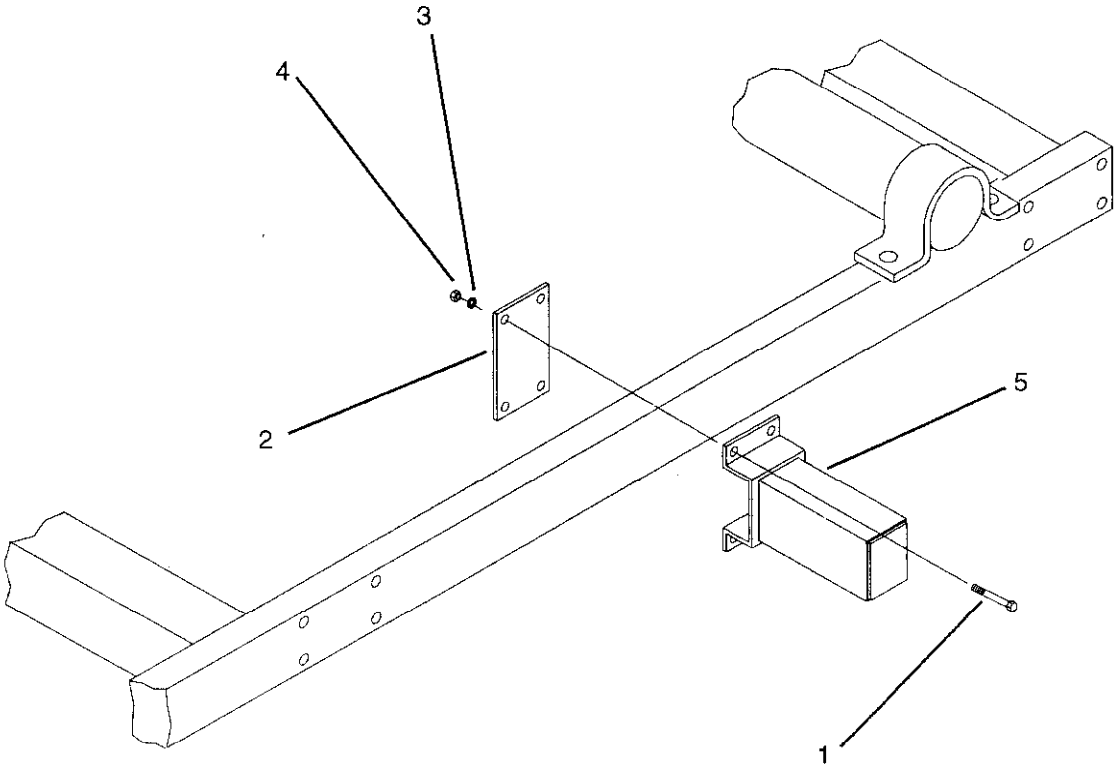

ITEM	PART NO	DESCRIPTION
1	88475	1/2NCx1-1/2 GR5 Bolt
2	26817	Backing Plate
3	88303	1/2 Lock Washer
4	88104	1/2NC Nut
5	26815	8" Saddle Stub
	49025	12" Saddle Stub
	48536	20" Saddle Stub

8" GAUGE WHEEL-WING

Serial Number 441250 & Up

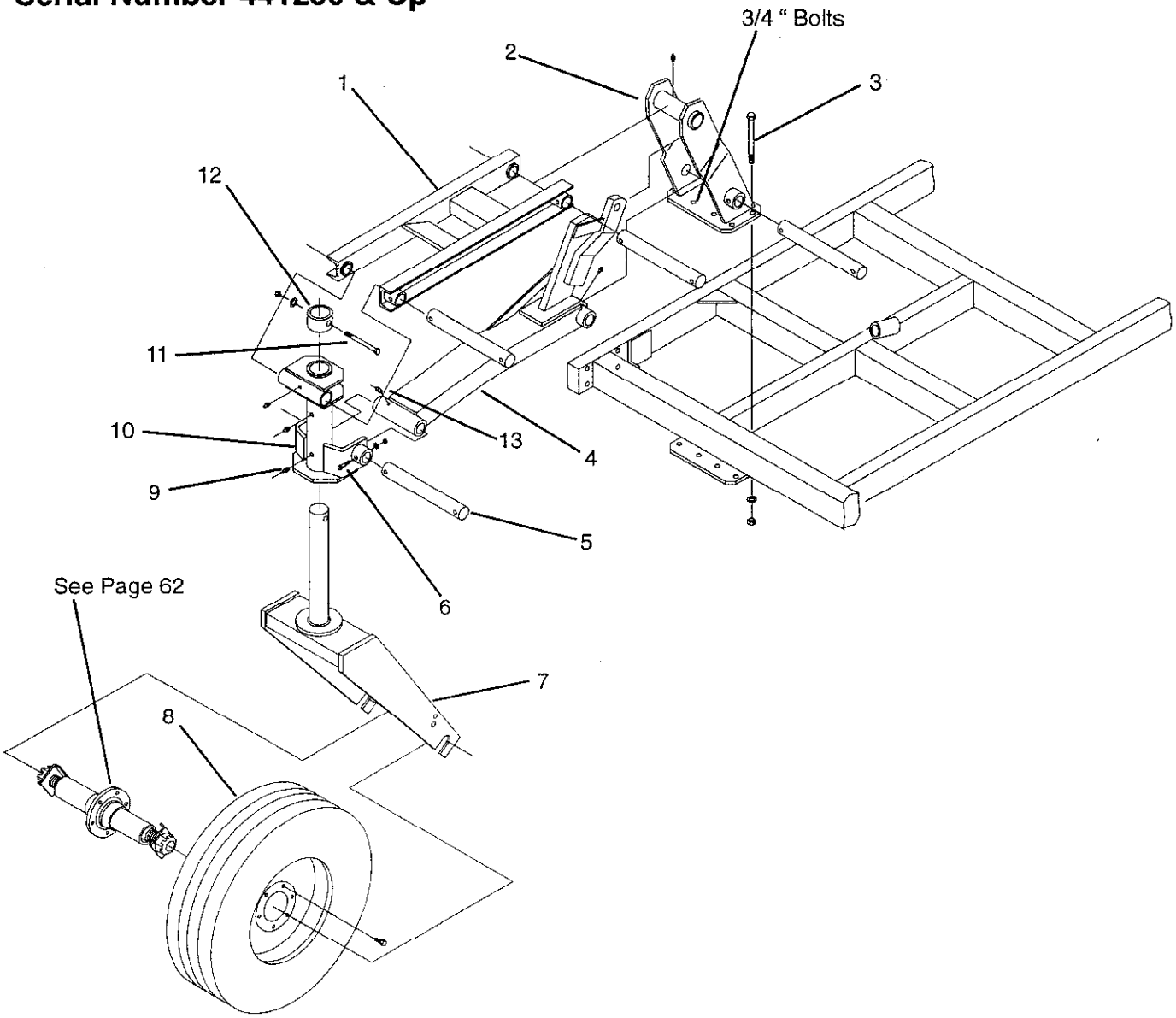

ITEM	PART NO	DESCRIPTION
1	54559	Top Link Arm (8")
2	55659	Gauge Wheel Mast
3	88293	3/4NCx6 GR5 Bolt
4	61385	Left 8" Lower Link Arm
	61386	Right 8" Lower Link Arm
5	54595	Pivot Pin
6	88582	3/8NCx2-3/4 GR5 Bolt
7	58203	Yoke (18")
8	16290	95Lx 15 Wheel Assembly
	10498	15x8 Wheel Rim
	16287	95Lx15 Tubeless Tire
	30784	Valve Stem Assembly

ITEM	PART NO	DESCRIPTION
9	88550	1/4NF Grease Fitting
10	54571	Gauge Wheel Pivot
11	88272	3/4NCx4 GR5 Bolt
12	16009	Collar
13	88778	1/4NF 45 Grease Fitting

Note: Standard nuts and lock washers are not called out. Anything other than standard will be called out.

STANDARD NUTS AND LOCK WASHERS

88172	**1/4NC Nut**	**88262**	**1/4 Lock Washer**
88103	**3/8NC Nut**	**88362**	**3/8 Lock Washer**
88104	**1/2NC Nut**	**88303**	**1/2 Lock Washer**
88126	**5/8NC Nut**	**88129**	**5/8 Lock Washer**
88110	**3/4NC Nut**	**88130**	**3/4 Lock Washer**
88371	**7/8NC Nut**	**88341**	**7/8 Lock Washer**

8" GAUGE WHEEL-WING

Serial Number 441249 & Below

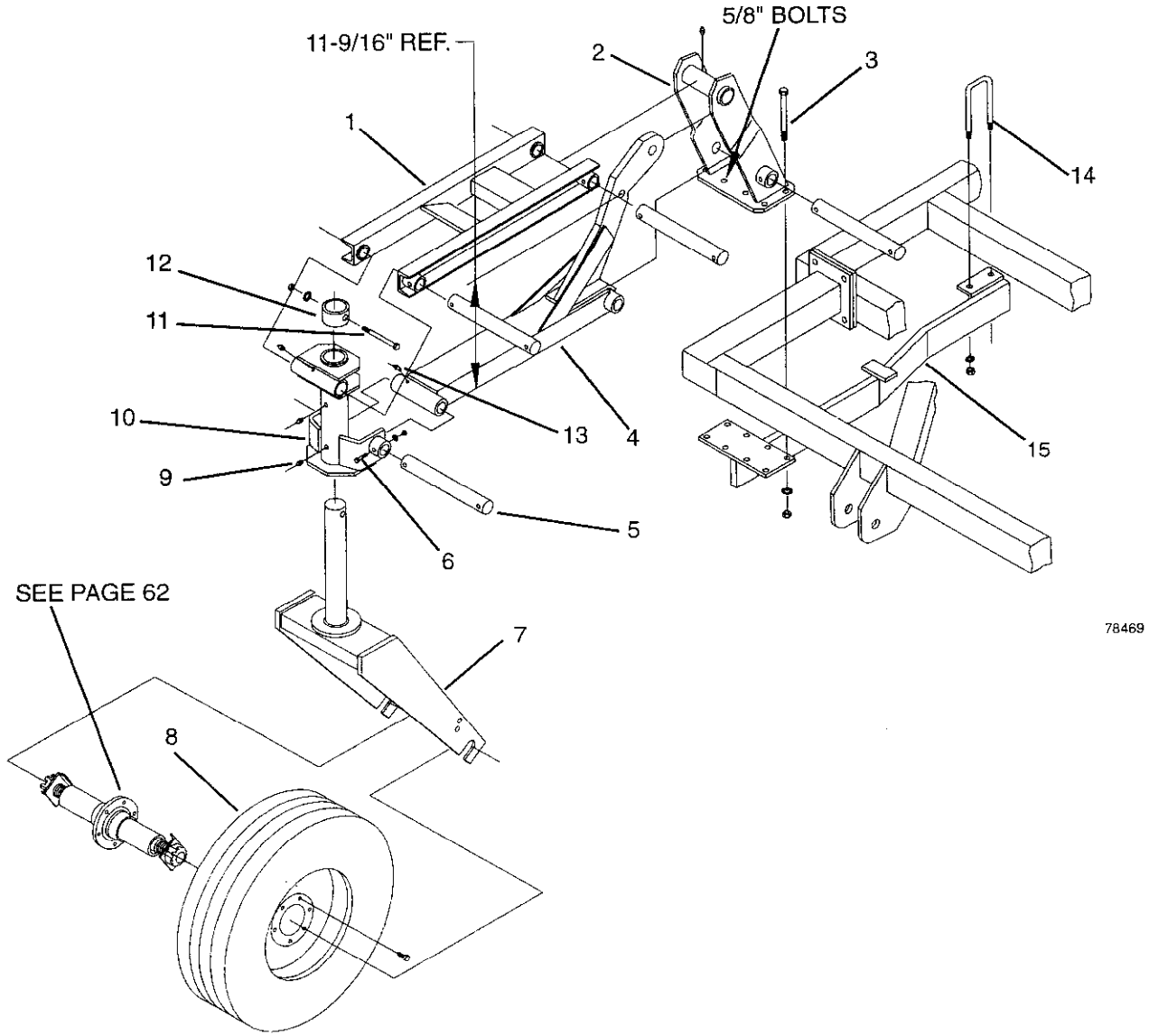

ITEM	PART NO	DESCRIPTION
1	54559	Top Link Arm (8")
2	54563	Gauge Wheel Mast
3	88295	5/8NCx6 GR5 Bolt
4	54556	Lower Gauge Arm
5	54595	Pivot Pin
6	88582	3/8NCx2-3/4 GR5 Bolt
7	54734	Yoke (14")
8	16290	95Lx 15 Wheel Assembly
	10498	15x8 Wheel Rim
	16287	95Lx15 Tubeless Tire
	30784	Valve Stem Assembly

ITEM	PART NO	DESCRIPTION
9	88550	1/4NF Grease Fitting
10	54571	Gauge Wheel Pivot
11	88272	3/4NCx4 GR5 Bolt
12	16009	Collar
13	88778	1/4NF 45 Grease Fitting
14	88503	5/8NCx3x5-1/4 U-Bolt
15	54683	Mast Support Right (shown)

Note: Standard nuts and lock washers are not called out. Anything other than standard will be called out.

STANDARD NUTS AND LOCK WASHERS

88172	**1/4NC Nut**	**88262**	**1/4 Lock Washer**
88103	**3/8NC Nut**	**88362**	**3/8 Lock Washer**
88104	**1/2NC Nut**	**88303**	**1/2 Lock Washer**
88126	**5/8NC Nut**	**88129**	**5/8 Lock Washer**
88110	**3/4NC Nut**	**88130**	**3/4 Lock Washer**
88371	**7/8NC Nut**	**88341**	**7/8 Lock Washer**

9.3" GAUGE WHEEL-MAIN FRAME

Serial Number 441250 & Up

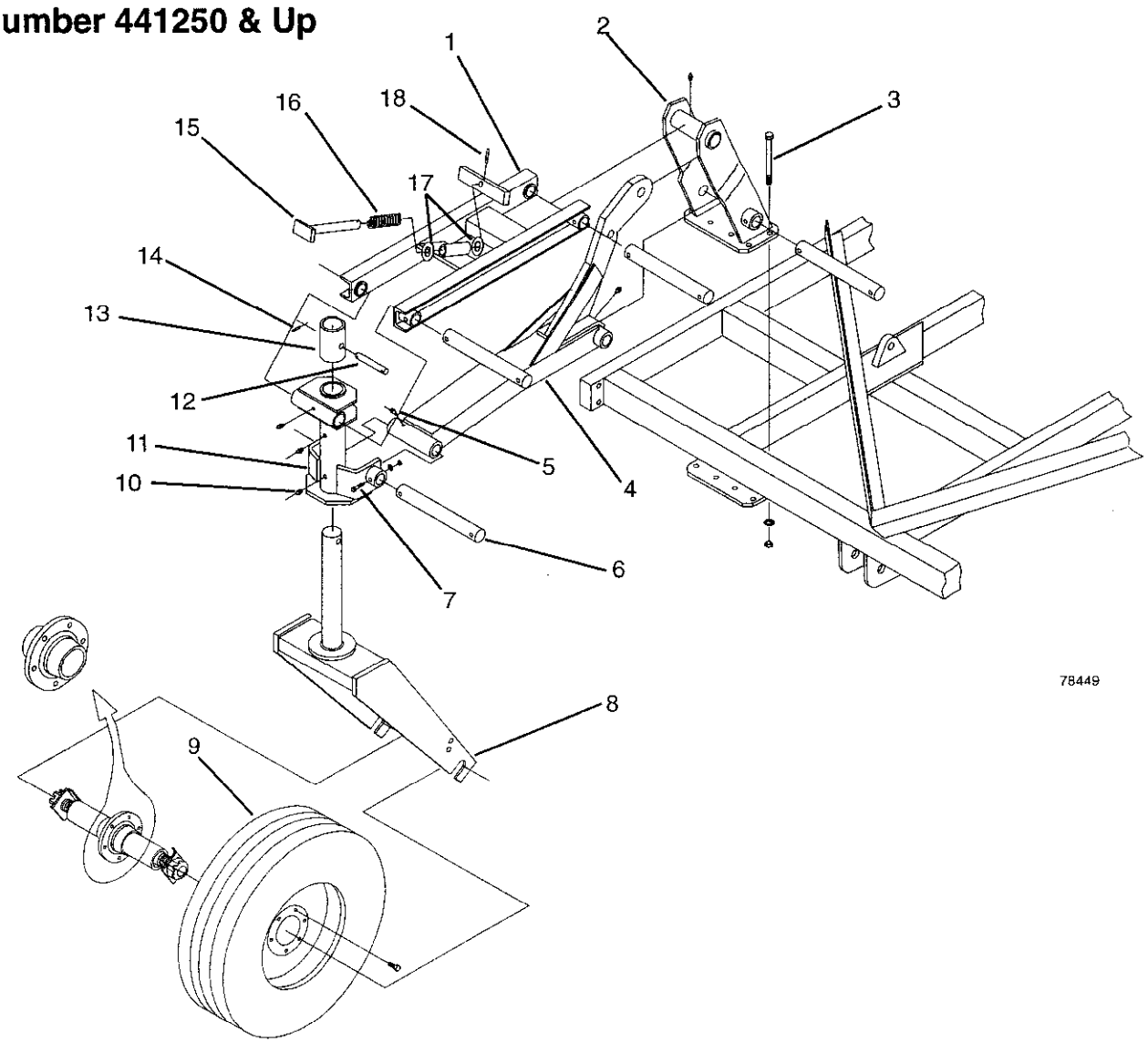

ITEM	PART NO	DESCRIPTION
1	54809	Top Link Arm (8")
2	55659	Gauge Wheel Mast
3	88293	3/4NCx6 GR5 Bolt
4	61384	Lower Link Arm
5	88778	1/4NF 45 Grease Fitting
6	54595	Pivot Pin
7	88582	3/8NCx2-3/4 GR5 Bolt
8	58203	Yoke (18")
9	16290	95Lx 15 Wheel Assembly
	10498	15x8 Wheel Rim
	16287	95Lx15 Tubeless Tire
	30784	Valve Stem Assembly
10	88550	1/4NF Grease Fitting
11	54571	Gauge Wheel Pivot
12	55152	3/4x4 Pin
13	55151	Collar

ITEM	PART NO	DESCRIPTION
14	88648	1/4x1-1/4 Roll Pin
15	62805	Spring Pin
16	54834	4-1/2" Compression Spring
17	88738	1" SAE Flat Washer
18	62804	Pin Guide
19	88628	Roll Pin

Note: Standard nuts and lock washers are not called out. Anything other than standard will be called out.

STANDARD NUTS AND LOCK WASHERS

88172	**1/4NC Nut**	**88262**	**1/4 Lock Washer**
88103	**3/8NC Nut**	**88362**	**3/8 Lock Washer**
88104	**1/2NC Nut**	**88303**	**1/2 Lock Washer**
88126	**5/8NC Nut**	**88129**	**5/8 Lock Washer**
88110	**3/4NC Nut**	**88130**	**3/4 Lock Washer**
88371	**7/8NC Nut**	**88341**	**7/8 Lock Washer**

9.3" GAUGE WHEEL-MAIN FRAME

Serial Numbers 441249 & Below

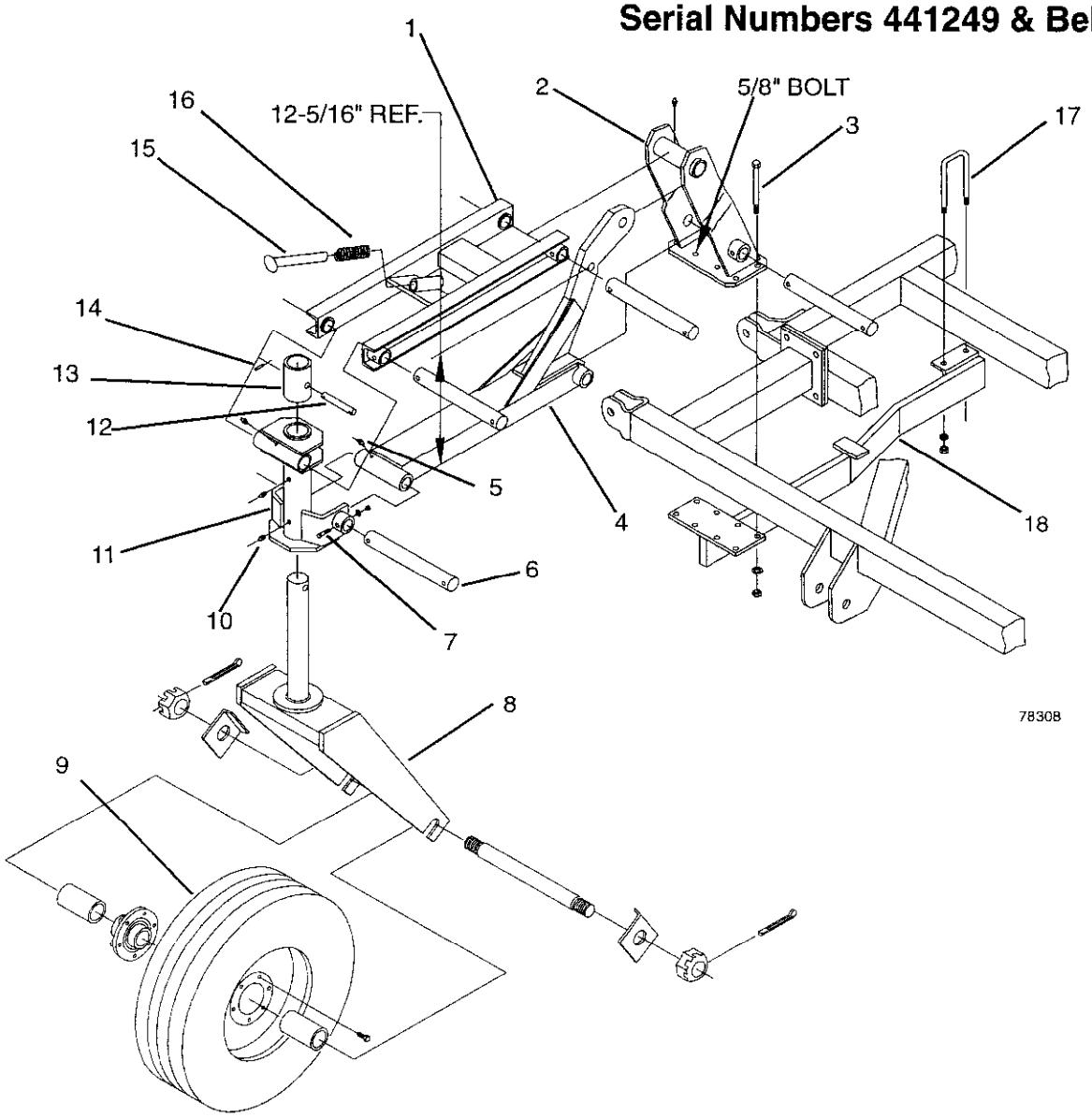

ITEM	PART NO	DESCRIPTION
1	54809	Top Link Arm (8")
2	54563	Gauge Wheel Mast
3	88295	5/8NCx6 GR5 Bolt
4	54557	Lower Link Arm
5	88778	1/4NF 45 Grease Fitting
6	54595	Pivot Pin
7	88582	3/8NCx2-3/4 GR5 Bolt
8	54734	Yoke (14" Width)
9	16290	95Lx 15 Wheel Assembly
	10498	15x8 Wheel Rim
	16287	95Lx15 Tubeless Tire
	30784	Valve Stem Assembly
10	88550	1/4NF Grease Fitting
11	54571	Gauge Wheel Pivot
12	55152	3/4x4 Pin
13	55151	Collar

ITEM	PART NO	DESCRIPTION
14	88648	1/4x1-1/4 Roll Pin
15	54827	Spring Pin
16	54834	4-1/2" Compression Spring
17	88503	5/8NCx3x5-1/4 U-Bolt
18	54683	Mast Support Right (Shown)
	54684	Mast Support Left

Note: Standard nuts and lock washers are not called out. Anything other than standard will be called out.

STANDARD NUTS AND LOCK WASHERS

88172	**1/4NC Nut**	**88262**	**1/4 Lock Washer**
88103	**3/8NC Nut**	**88362**	**3/8 Lock Washer**
88104	**1/2NC Nut**	**88303**	**1/2 Lock Washer**
88126	**5/8NC Nut**	**88129**	**5/8 Lock Washer**
88110	**3/4NC Nut**	**88130**	**3/4 Lock Washer**
88371	**7/8NC Nut**	**88341**	**7/8 Lock Washer**

11' WING REST

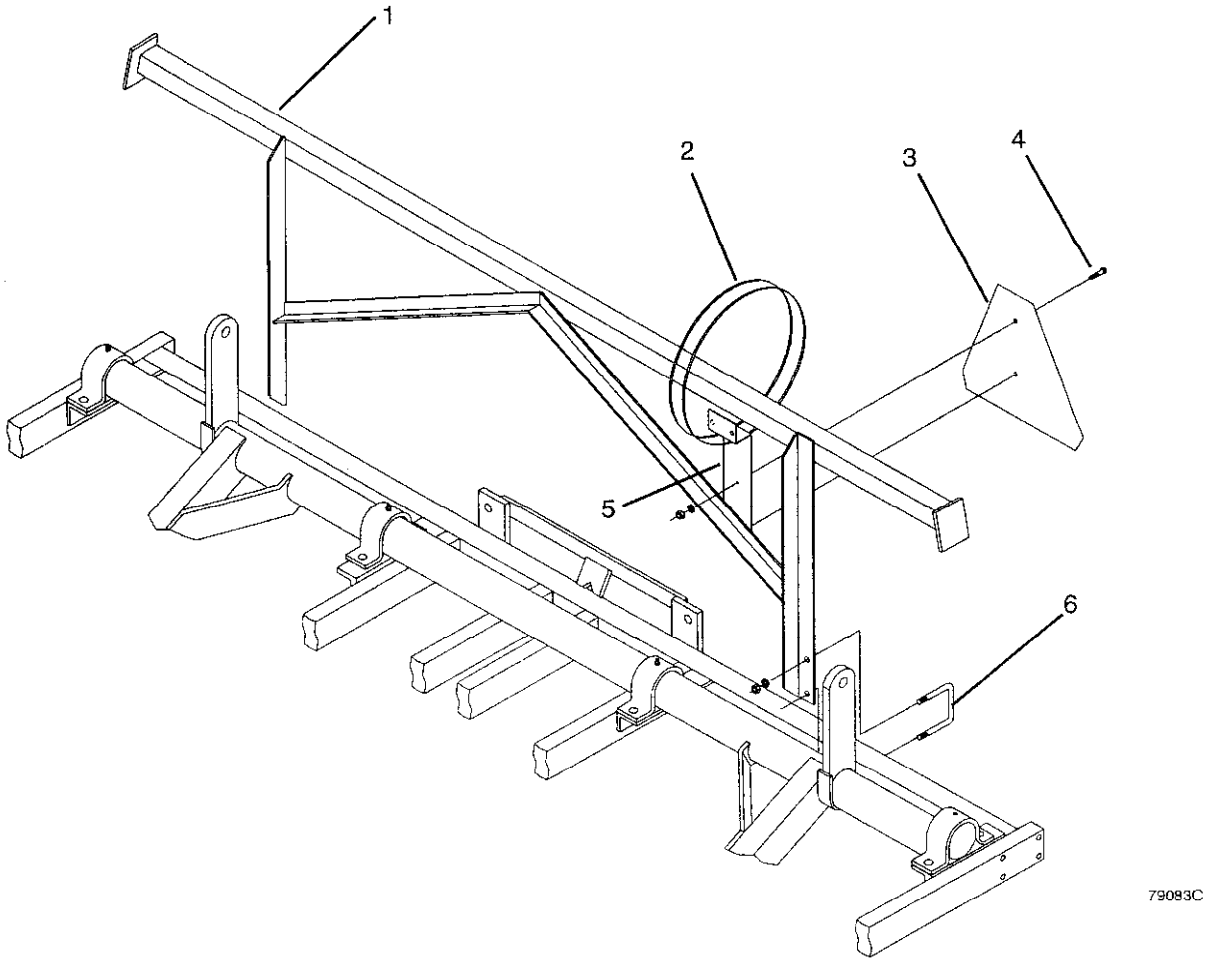

ITEM	PART NO	DESCRIPTION
1	66314	11' Wing Rest
2	33096	Nylon Tie Wrap
3	30651	SMV Emblem
	41345	SMV Kit (Includes Items 2-6)
4	88351	1/4NCx3/4 Bolt
5	41359	SMV Bracket
6	88501	5/8NCx4x4-1/4 U-Bolt

Note: Standard nuts and lock washers are not called out. Anything other than standard will be called out.

STANDARD NUTS AND LOCK WASHERS

88172	**1/4NC Nut**	**88262**	**1/4 Lock Washer**
88103	**3/8NC Nut**	**88362**	**3/8 Lock Washer**
88104	**1/2NC Nut**	**88303**	**1/2 Lock Washer**
88126	**5/8NC Nut**	**88129**	**5/8 Lock Washer**
88110	**3/4NC Nut**	**88130**	**3/4 Lock Washer**
88371	**7/8NC Nut**	**88341**	**7/8 Lock Washer**

WING REST

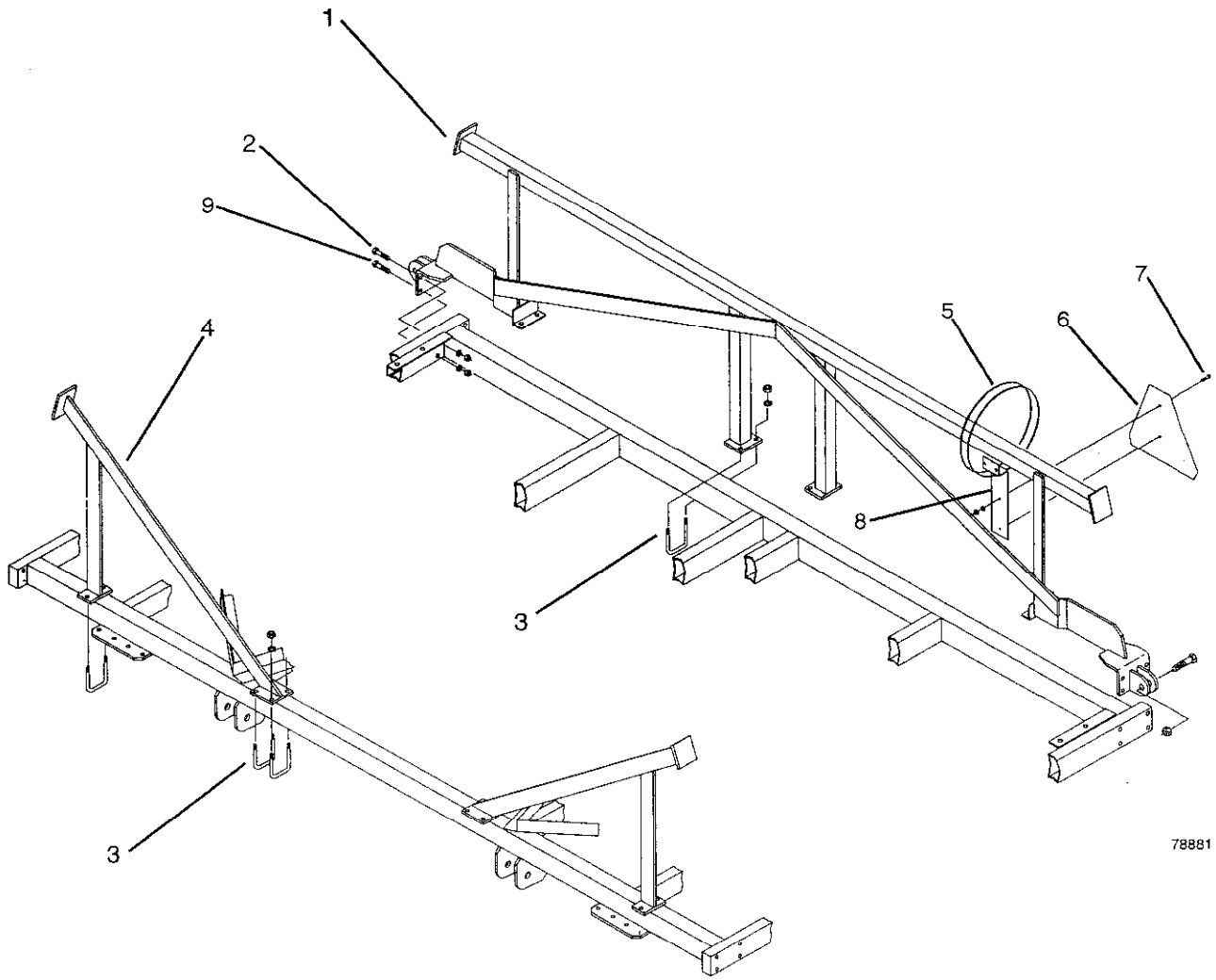

ITEM	PART NO	DESCRIPTION
1	61236	13' 5Bar Q5 Wing Rest
	61237	16' 5Bar Q5 Wing Rest (Serial Numbers 441250 & Up)
	48512	3411 Wing Rest
	48514	3450 Wing Rest (Serial Numbers 441249 & Down)
2	88298	5/8NCx4 GR5 Bolt
3	88503	5/8NCx3x5-1/4 U-Bolt
4	55769	5Bar Q5 Single Wing Rest (Serial Numbers 441250 & Up)
	55036	Front Wing Rest (Serial Numbers 441249 & Down)
5	33096	Nylon Tie Wrap
6	30651	SMV Emblem
	41345	SMV Kit (Includes Items 5-8)

ITEM	PART NO	DESCRIPTION
7	88351	1/4NCx3/4 Bolt
8	41359	SMV Bracket
9	88501	5/8NCx3-1/2 GR5 Bolt

Note: Standard nuts and lock washers are not called out. Anything other than standard will be called out.

STANDARD NUTS AND LOCK WASHERS

88172	**1/4NC Nut**	**88262**	**1/4 Lock Washer**
88103	**3/8NC Nut**	**88362**	**3/8 Lock Washer**
88104	**1/2NC Nut**	**88303**	**1/2 Lock Washer**
88126	**5/8NC Nut**	**88129**	**5/8 Lock Washer**
88110	**3/4NC Nut**	**88130**	**3/4 Lock Washer**
88371	**7/8NC Nut**	**88341**	**7/8 Lock Washer**

WING LIFT HYDRAULICS

11' MF - 7' Wing

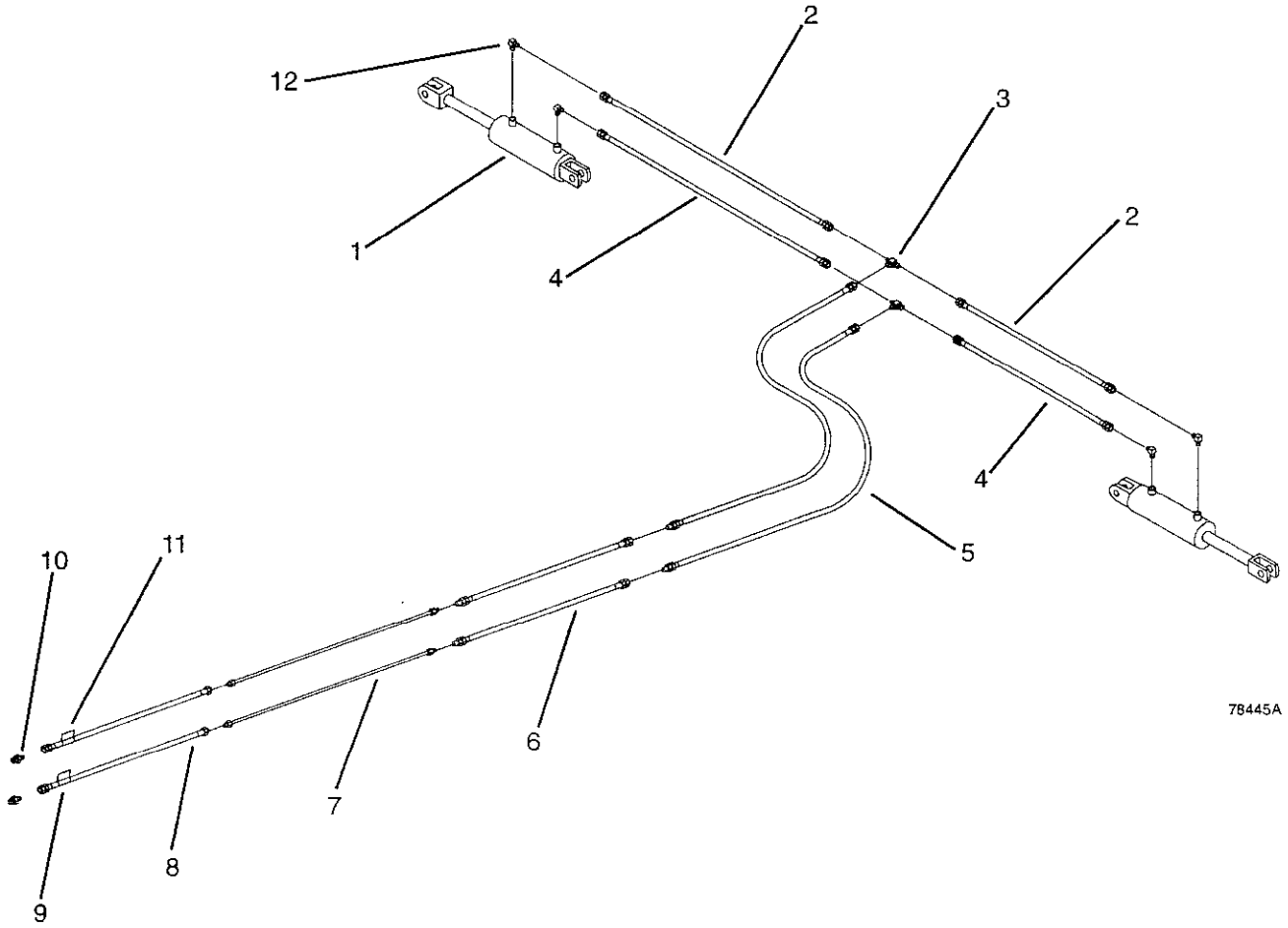

ITEM	PART NO	DESCRIPTION
1	51229	4x30 Cylinder
2	25602	3/8x65 Hose FF
3	13238	3/4JIC Tube Tee
4	25596	3/8x32 Hose FF
5	13580	3/8x96 Hose MF
6	24569	3/8x80 Hose FF
7	13255	1/2x110 Hyd Tube
8	13267	3/8x72 Hose MF
9	54901	Wings Down Decal
10	13234	3/4JICx1/2NPT Coupler Adapter
11	54900	Wings Up Decal
12	13235	3/4JICx3/8NPT Elbow

WING LIFT HYDRAULICS - 7' WING

Serial Numbers 441250 & Up

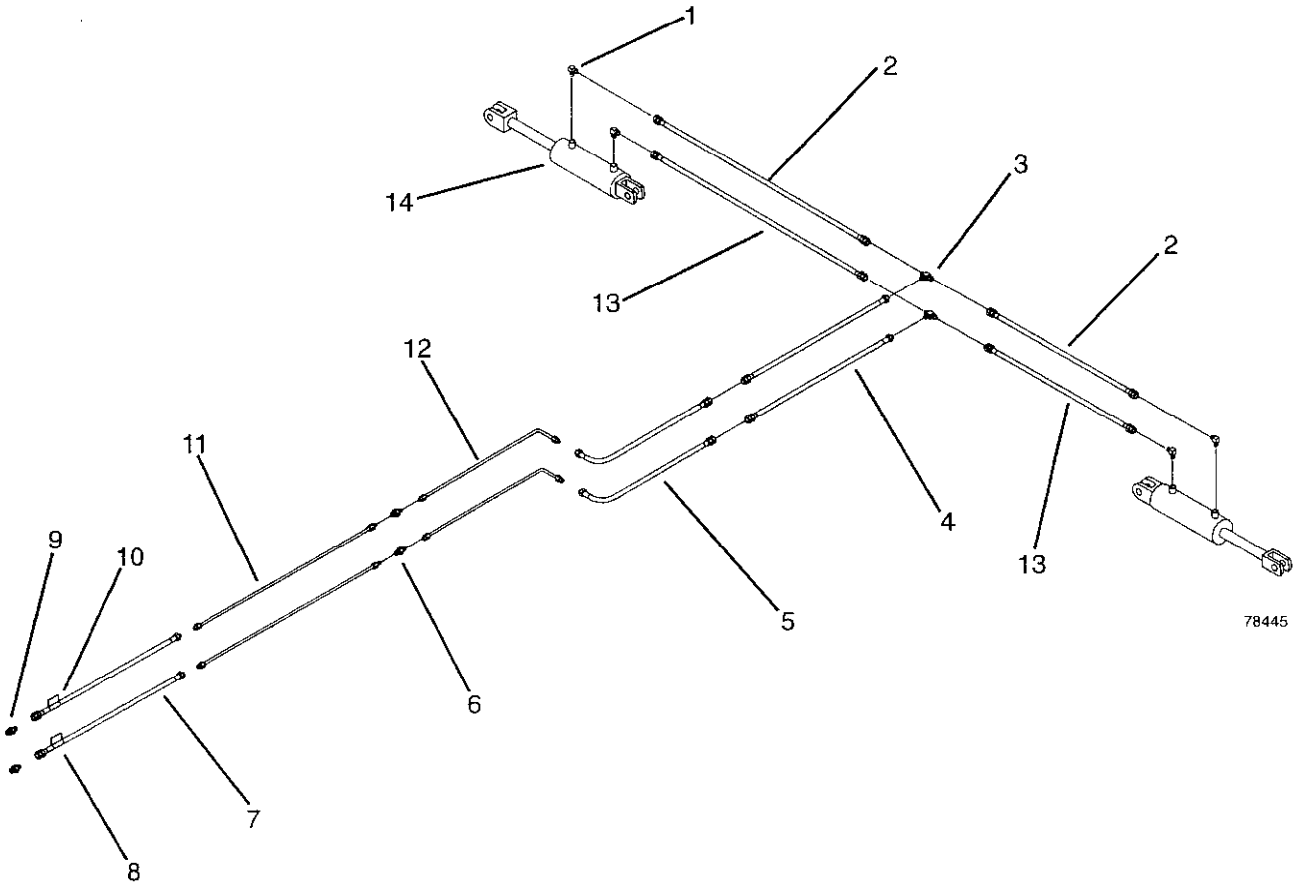

ITEM	PART NO	DESCRIPTION	ITEM	PART NO	DESCRIPTION
1	13235	3/4JICx3/8NPT Port Elbow	8	54901	Wing Down Decal
2	25603	3/8x75 Hose FF	9	13234	3/4JICx1/2NPT Coupler Adapter
3	13238	3/4JIC Tube Tee	10	54900	Wing Up Decal
4	13267	3/8x72 Hose MF	11	20465	1/2x48 Hyd Tube
5	13264	3/8x48 Hose MF	12	13258	1/2x60+2 Hyd Tube
6	13239	3/4JIC Hose Union	13	14851	3/8x42 Hose FF
7	13267	3/8x72 Hose MF	14	51229	4x30 Cylinder

WING LIFT HYDRAULICS - 7' WING

Serial Numbers 441249 & Below

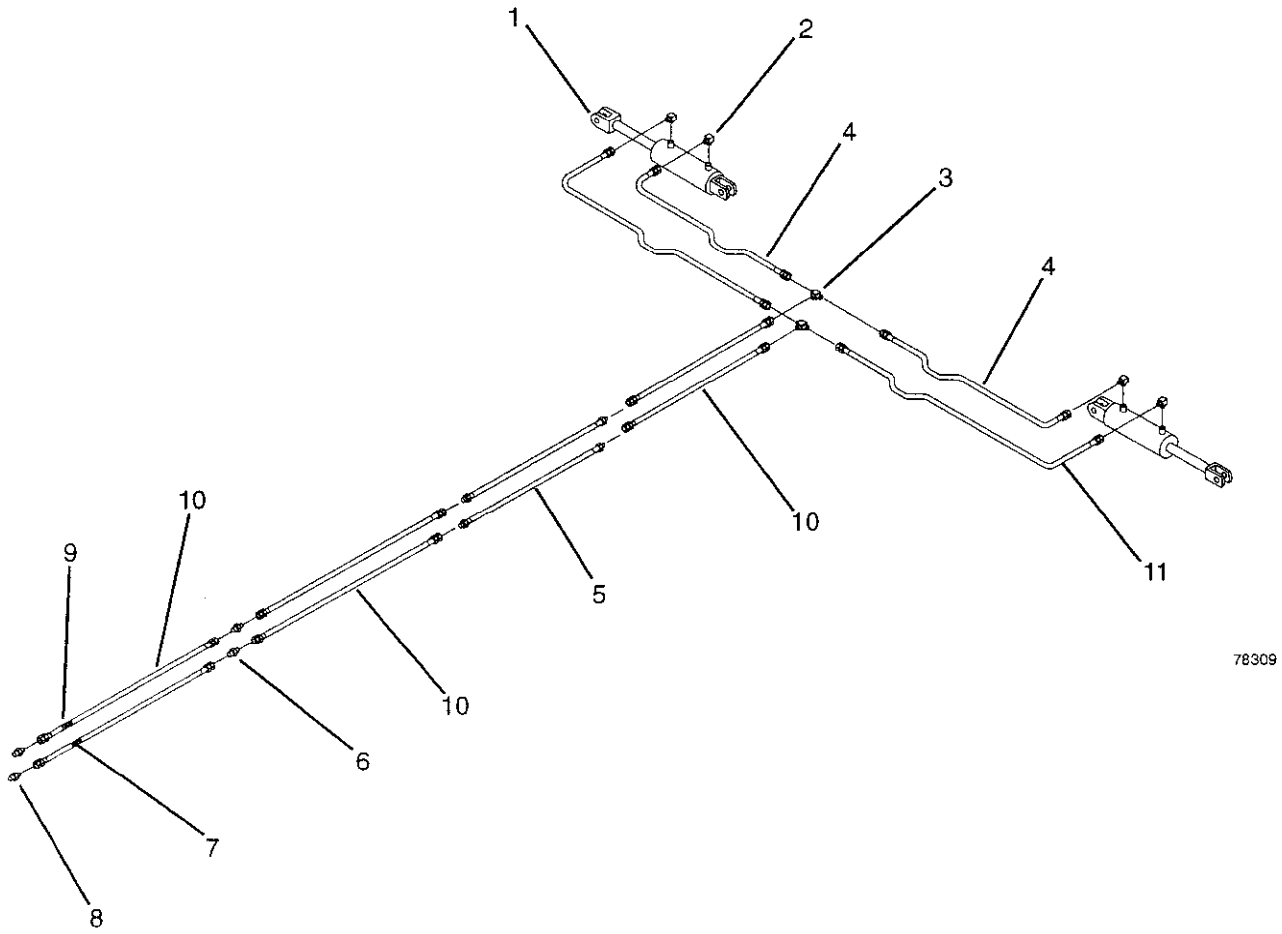

ITEM	PART NO	DESCRIPTION
1	51229	4x30 Cylinder
2	13235	3/4JICx3/8NPT Port Elbow
3	13238	3/4JIC Tube Tee
4	13261	3/8x30 Hose MF
5	15995	3/8x24 Hose MF
6	13239	3/4JIC Hose Union
7	54900	Wing Up Decal
8	13234	3/4JICx1/2NPT Coupler Adapter
9	54901	Wing Down Decal
10	13482	3/8x108 Hose FF
11	15515	3/8x62 Hose FF

WING LIFT HYDRAULICS

11' MF - 9'4" WING

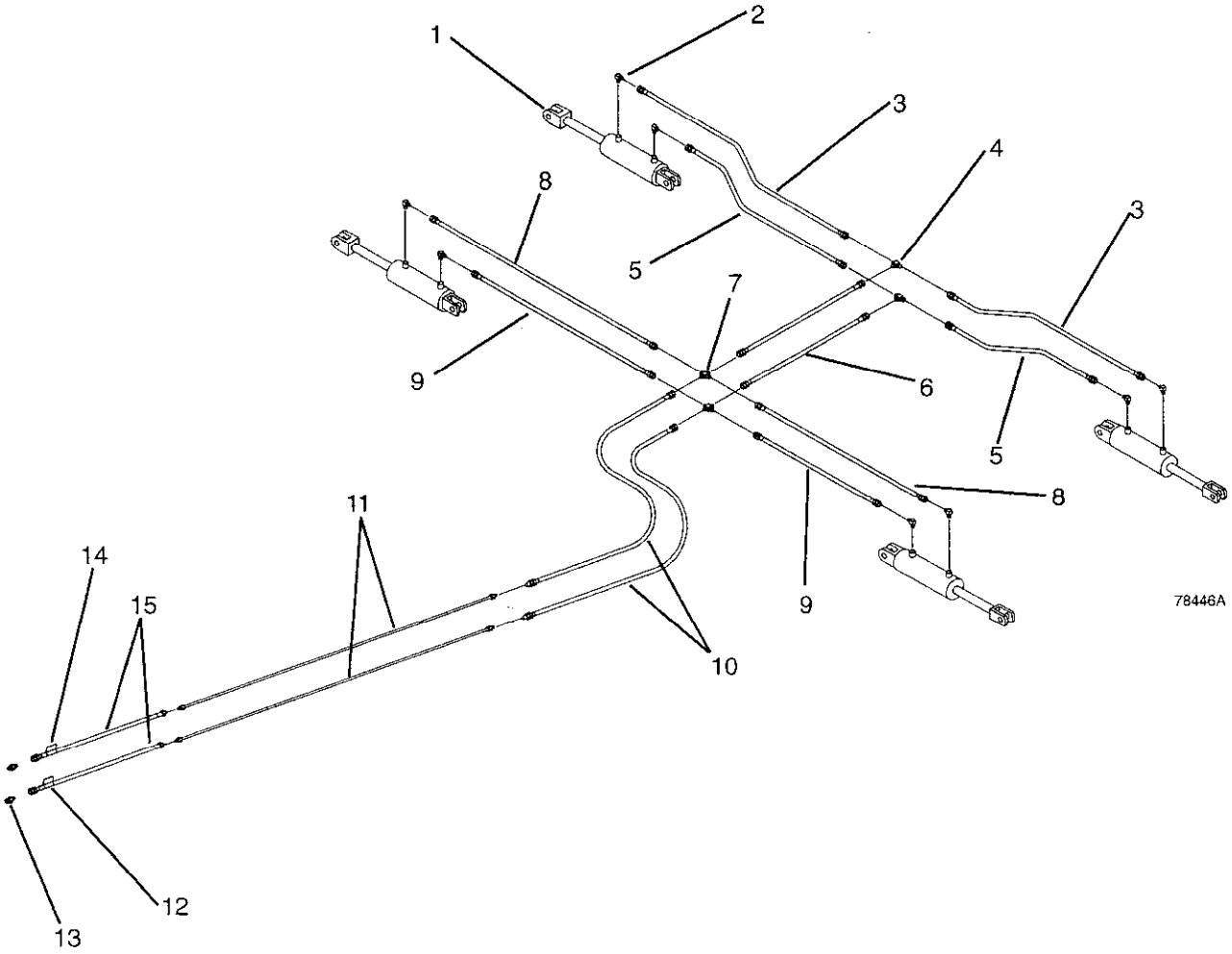

ITEM	PART NO	DESCRIPTION
1	51229	4x30 Cylinder
2	13235	3/4JICx3/8NPT Elbow
3	15515	3/8x62 Hose FF
4	13238	3/4JIC Tube Tee
5	13261	3/8x30 Hose FF
6	25603	3/8x75 Hose FF
7	15910	3/4JIC Cross
8	56539	3/8x50 Hose FF
9	25595	3/8x26 Hose FF
10	24182	3/8x84 Hose MF
11	13255	1/2x110 Hyd Tube
12	54901	Wing Down Decal
13	13234	3/4JICx1/2NPT Coupler Adapter
14	54900	Wing Up Decal
15	13267	3/8x72 Hose MF

WING LIFT HYDRAULICS

13' MF w/ 9'4" & 11'8" WINGS
Serial Numbers 441250 & Up

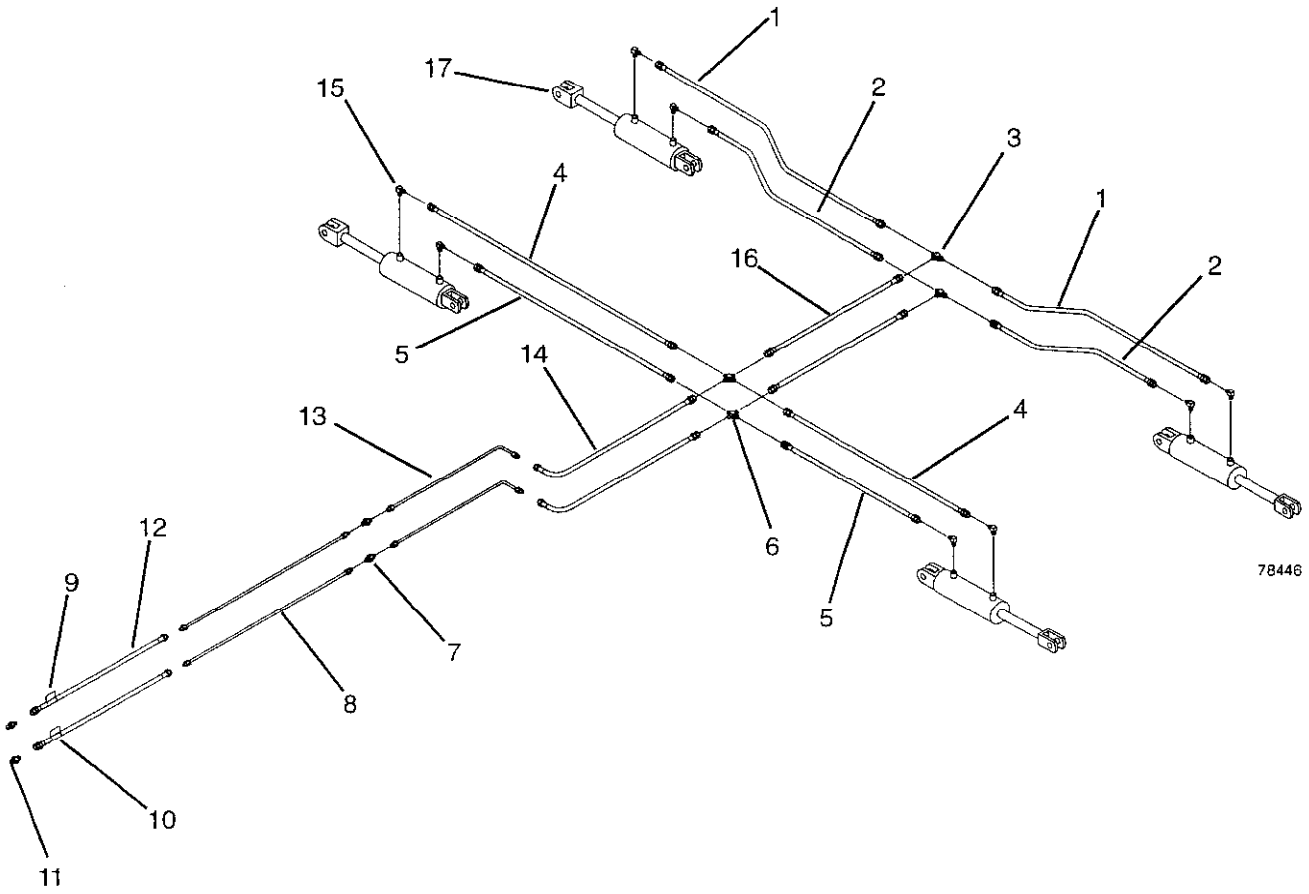

ITEM	PART NO	DESCRIPTION
1	25603	3/8x75 Hose FF
2	14851	3/8x42 Hose FF
3	13238	3/4JIC Tube Tee
4	25602	3/8x65 Hose MF
5	14644	3/8x36 Hose MF
6	15910	3/4JIC Cross
7	13239	3/4JIC Hose Union
8	20465	1/2x48 Hyd Tube (13'MF)

ITEM	PART NO	DESCRIPTION
9	54900	Wing Up Decal
10	54901	Wing Down Decal
11	13234	3/4JICx1/2NPT Coupler Adapter
12	13267	3/8x72 Hose MF
13	13258	1/2x60+2 Hyd Tube
14	13264	3/8x48 Hose MF
15	13235	3/4JICx3/8NPT Port Elbow
16	25603	3/8x75 Hose FF
17	51229	4x30 Cylinder

WING LIFT HYDRAULICS

16' MF w/11'8" Wing
Serial Numbers 441250 & Up

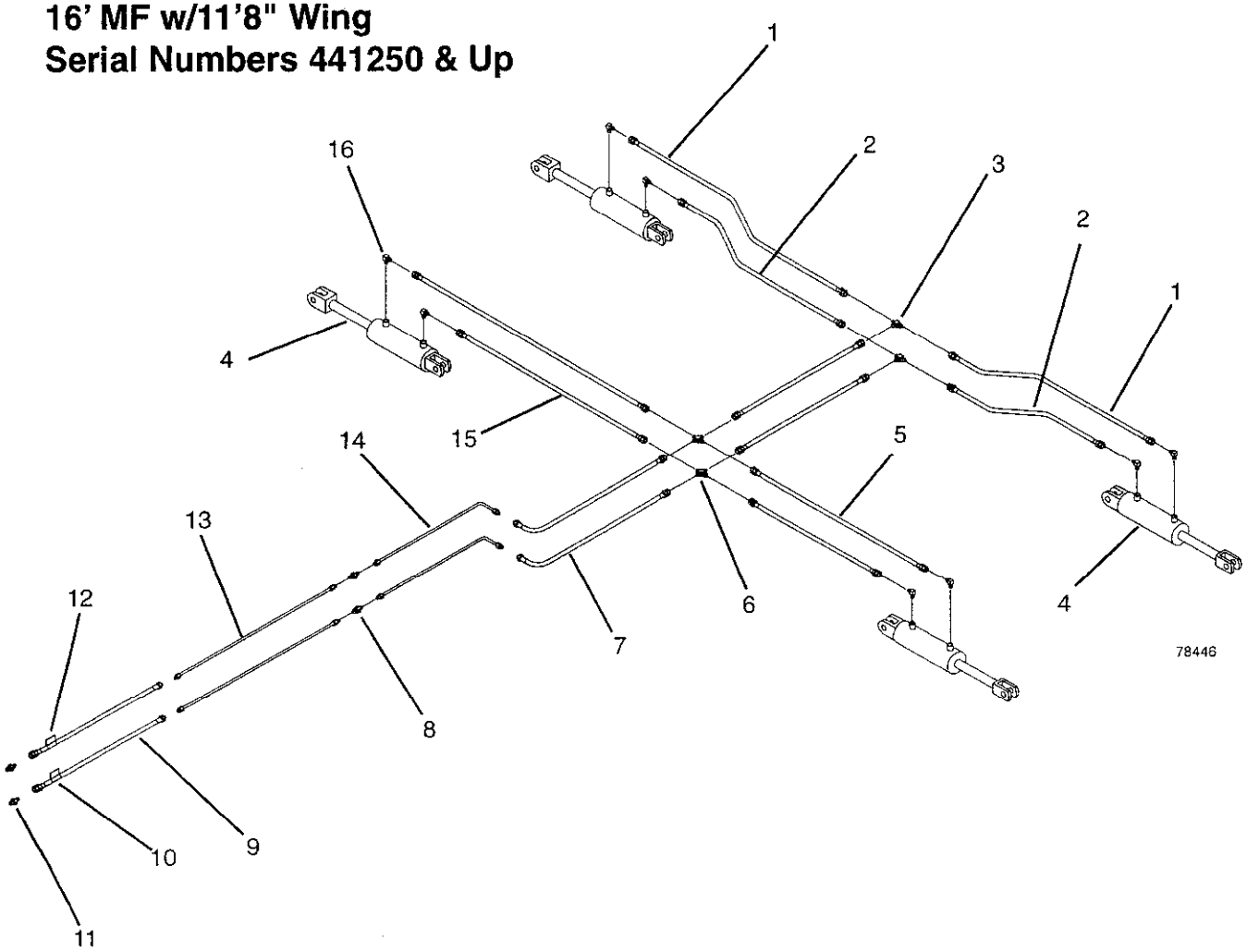

ITEM	PART NO	DESCRIPTION
1	54540	3/8x89 Hose FF
2	13265	3/8x56 Hose FF
3	13238	3/4JIC Tube Tee
4	51229	4x30 Cylinder
5	13268	3/8x78 Hose FF
6	15910	3/4JIC Tube Cross
7	13264	3/8x48 Hose MF
8	13239	3/4JIC Hose Union

ITEM	PART NO	DESCRIPTION
9	13267	3/8x72 Hose MF
10	54901	Wings Down Decal
11	13234	3/4JICx1/2NPT Coupler Adapter
12	54900	Wings Up Decal
13	13254	1/2x80 Hyd Tube
14	13258	1/2x60+2 Hyd Tube
15	56539	3/8x50 Hose FF
16	13235	3/4JICx3/8NPT Port Elbow

WING LIFT HYDRAULICS

13' MF & 16' MF w/9'4" & 11'8" WINGS
Serial Number 441249 & Below

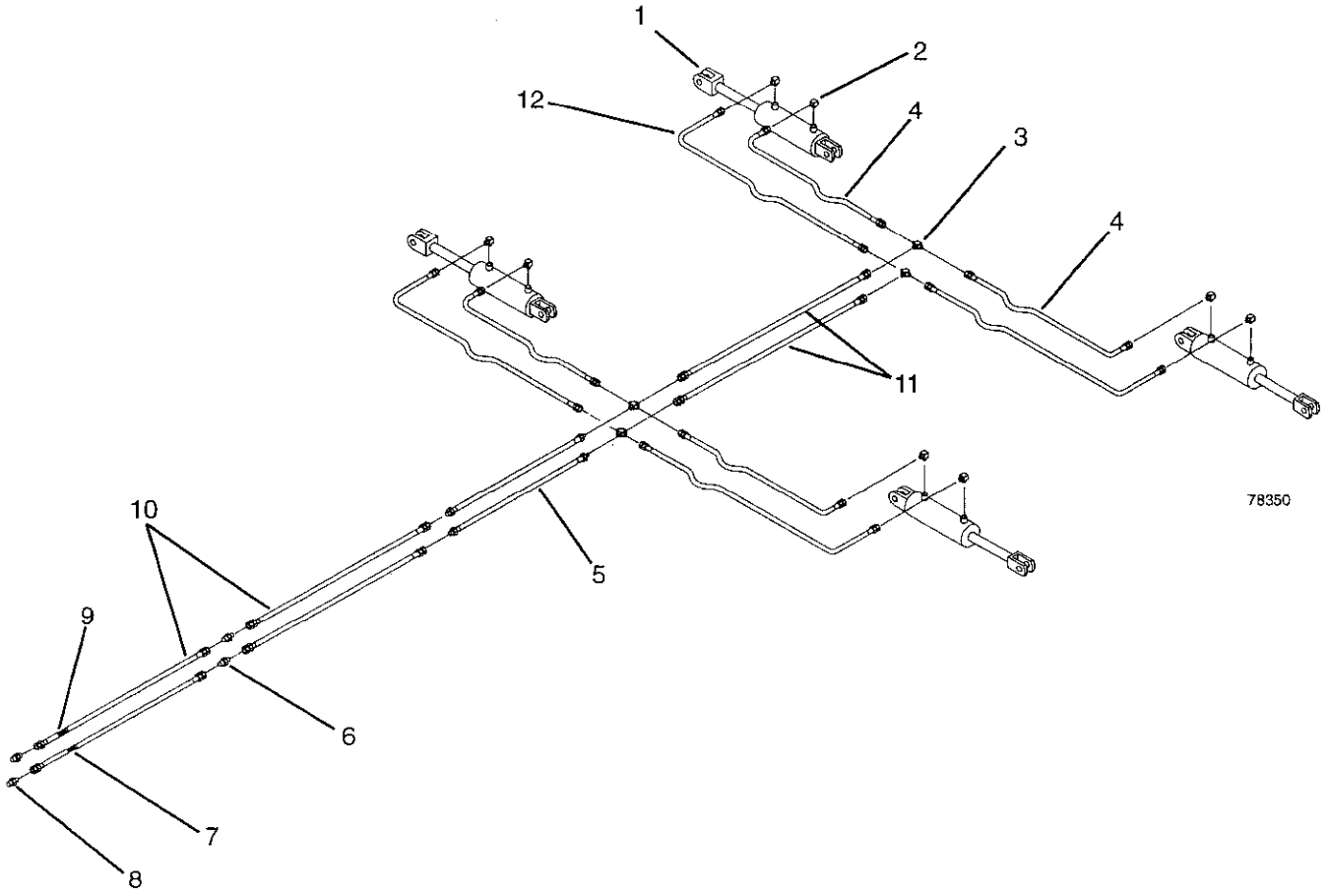

ITEM	PART NO	DESCRIPTION
1	51229	4x30 Cylinder
2	13235	3/4JICx3/8NPT Port Elbow
3	13238	3/4JIC Tube Tee
4	13261	3/8x30 Hose FF (13' MF)
	14851	3/8x42 Hose FF (16' MF)
5	13266	3/8x60 Hose MF (13' MF)
	13269	3/8x84 Hose MF (16'MF)

ITEM	PART NO	DESCRIPTION
6	13239	3/4JIC Hose Union
7	54900	Wing Up Decal
8	13234	3/4JICx1/2NPT Coupler Adapter
9	54901	Wing Down Decal
10	13482	3/8x108 Hose FF
11	15515	3/8x62 Hose FF
12	15515	3/8x62 Hose FF (13' MF)
	13268	3/8x78 Hose FF (16'MF)

WING LIFT HYDRAULICS

11' MF, 9'4" w/5' OUTER WING

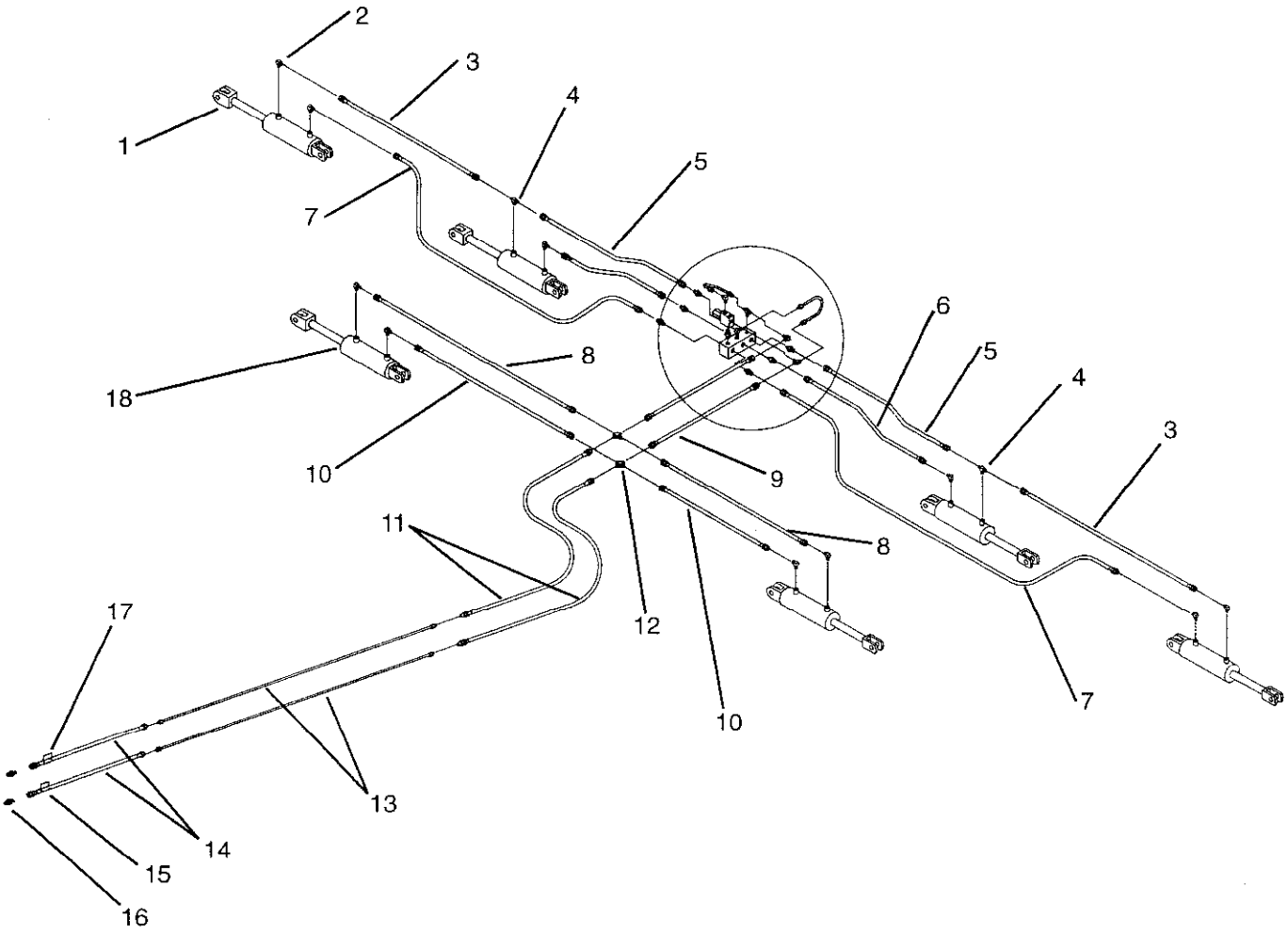

ITEM	PART NO	DESCRIPTION
1	51235	3-1/2x24 Cylinder
2	13235	3/4JICx3/8NPT Port Elbow
3	13483	3/8x120 Hose FF
4	13237	3/8Cylinder Port Tee
4	25602	3/8x65 Hose FF
6	14851	3/8x42 Hose FF
7	13484	3/8x156 Hose FF
8	56539	3/8x50 Hose FF
9	25603	3/8x75 Hose FF

ITEM	PART NO	DESCRIPTION
10	25595	3/8x26 Hose FF
11	24182	3/8x84 Hose MF
12	15910	3/4JIC Cross
13	13255	1/2x110 Hyd Tube
14	13267	3/8x72 Hose MF
15	54901	Wings Down Decal
16	13234	Adapter
17	54900	Wings Down Decal
18	51229	4x30 Cylinder

WING LIFT HYDRAULICS

13 MF, 9'4" w/3' OR 5' OUTER WING
Serial Numbers 441250 & Up

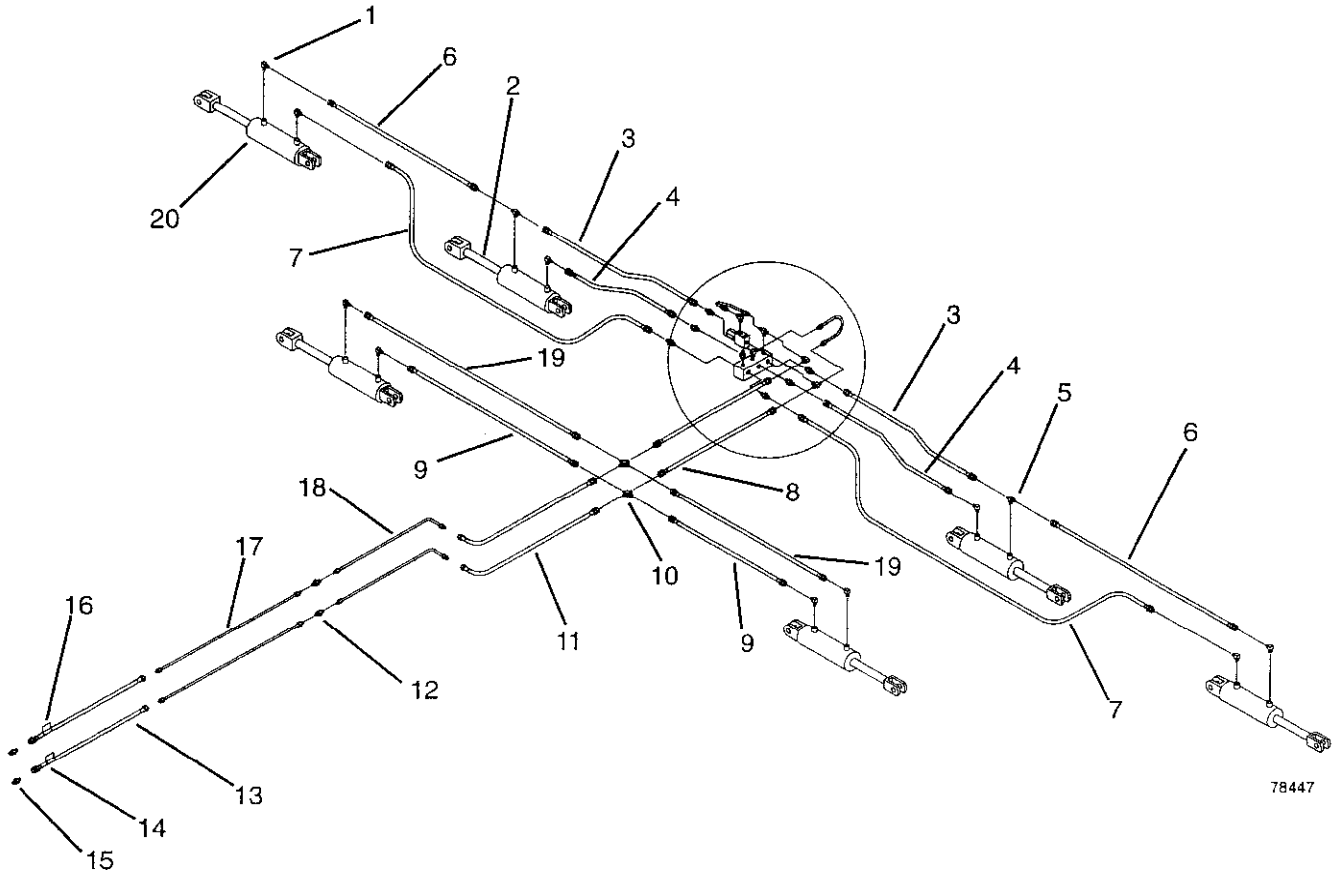

ITEM	PART NO	DESCRIPTION
1	13235	3/4JICx3/8NPT Port Elbow
2	51229	4x30 Cylinder
3	25603	3/8X75 Hose FF
4	14851	3/8x42 Hose FF
5	13237	3/8 Cylinder Port Tee
6	13483	3/8x120 Hose FF
7	13484	3/8x156 Hose FF
8	25603	3/8X75 Hose FF
9	14644	3/8x36 Hose FF
10	15910	3/4JIC Cross

ITEM	PART NO	DESCRIPTION
11	13264	3/8x48 Hose MF
12	13239	3/4JIC Hose Union
13	13267	3/8x72 Hose MF
14	54901	Wings Down Decal
15	13234	3/4JICx1/2NPT Coupler Adapter
16	54900	Wings Up Decal
17	20465	1/2x48 Hyd Tube
18	13258	1/2x60+2 Hyd Tube
19	25602	3/8x65 Hose FF
20	51235	3-1/2x24 Cylinder

WING LIFT HYDRAULICS

13'MF, 11'8" WING w/3' OR 5' OUTER WINGS
Serial Numbers 441250 & Up

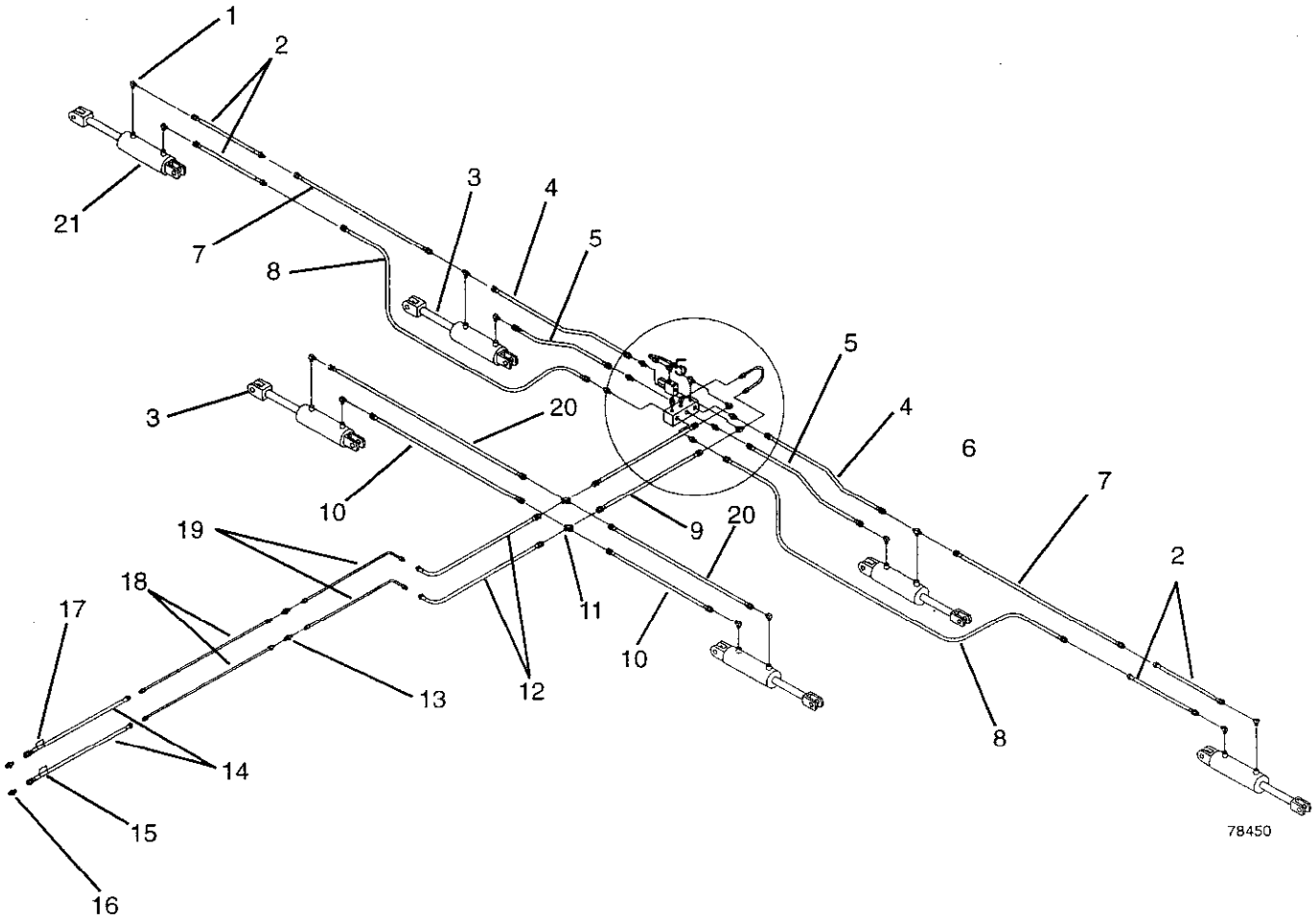

ITEM	PART NO	DESCRIPTION
1	13235	3/4JICx3/8NPT Port Elbow
2	13262	3/8x30 Hose MF
3	51229	4x30 Cylinder
4	25603	3/8x75 Hose FF
5	14851	3/8x42 Hose FF
6	13237	3/8 Cylinder Port Tee
7	13483	3/8x120 Hose FF
8	13484	3/8x156 Hose FF
9	25603	3/8x75 Hose FF
10	14644	3/8x36 Hose FF

ITEM	PART NO	DESCRIPTION
11	15910	3/4JIC Tube Cross
12	13264	3/8x48 Hose MF
13	13239	3/4JIC Hose Union
14	13267	3/8x72 Hose MF
15	54901	Wings Down Decal
16	13234	3/4JICx1/2NPT Coupler Adapter
17	54900	Wings Up Decal
18	20465	1/2x48 Hyd Tube
19	13258	1/2x60+2 Hyd Tube
20	25602	3/8x65 Hose FF
21	51235	3-1/2x24 Cylinder

WING LIFT HYDRAULICS

13'MF, 9'4" OR 11'8" WING w/3' OR 5' OUTER WING
Serial Numbers 441249 & Below

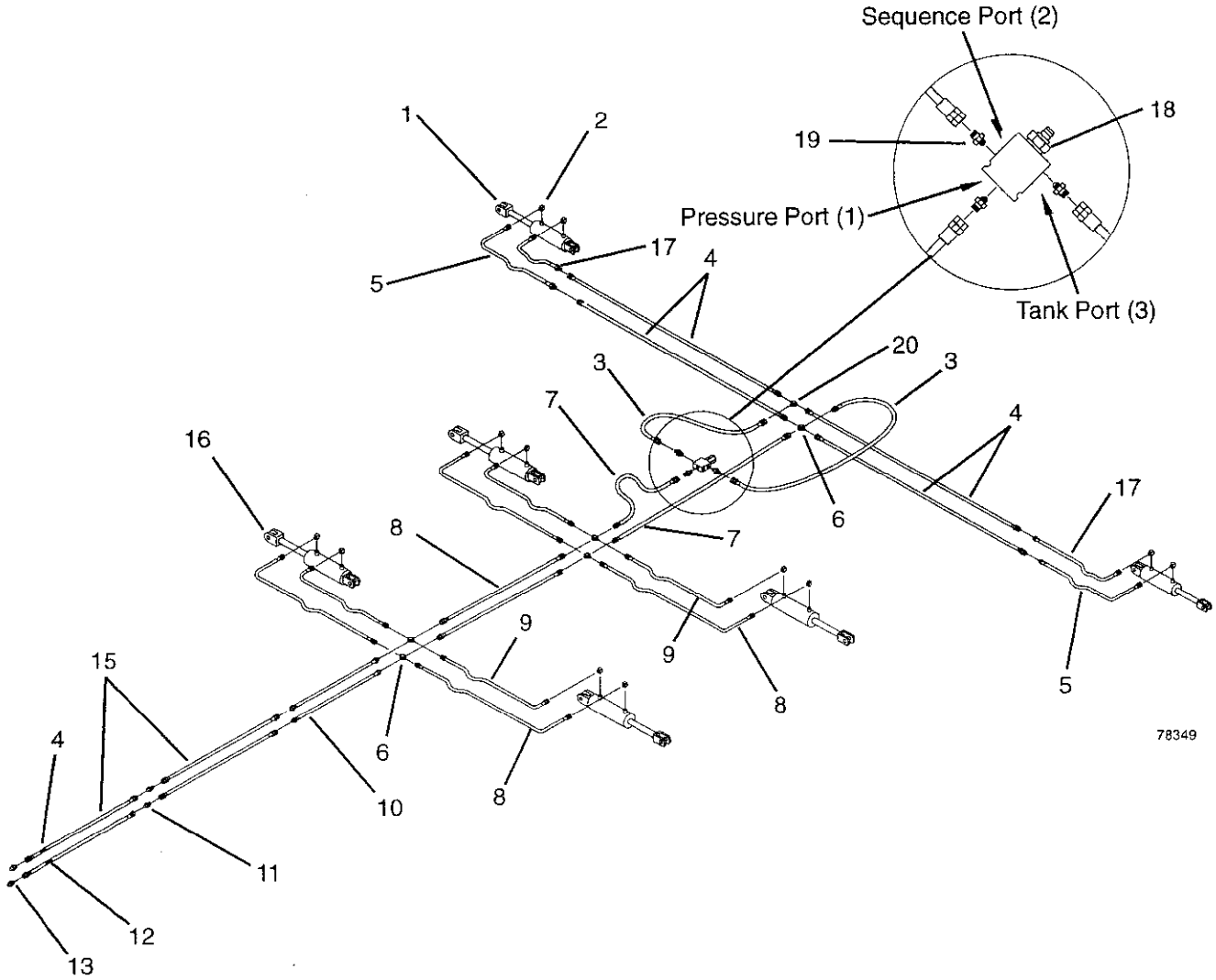

ITEM	PART NO	DESCRIPTION
1	51235	3-1/2x24 Cylinder
2	13235	3/4JICx3/8NPT Port Elbow
3	13423	3/8x24 Hose FF
4	13483	3/8x120 Hose FF (9'4" Wing)
	13484	3/8x156 Hose FF (11'8" Wing)
5	13264	3/8x48 Hose MF (9'4" Wing)
	13263	3/8x36 Hose MF (11'8" Wing)
6	15910	3/4JIC Tube Cross
7	14850	3/8x18 Hose FF
8	15515	3/8x62 Hose FF
9	13261	3/8x30 Hose FF

ITEM	PART NO	DESCRIPTION
10	13266	3/8x60 Hose MF
11	13239	3/4JIC Hose Union
12	54901	Wing Down Decal
13	13234	3/4JICx1/2NPT Coupler Adapter
14	54900	Wing Up Decal
15	13482	3/8x108 Hose FF
16	51229	4x30 Cylinder
17	13259	3/8x18 Hose MF
18	51655	Sequence Valve
19	24024	3/4JICx3/4ORB Adapter
20	13238	3/4JIC Tube Tee

WING LIFT HYDRAULICS

16'MF, 11'8" WING w/3' OR 5' OUTER WINGS
Serial Numbers 441250 & Up

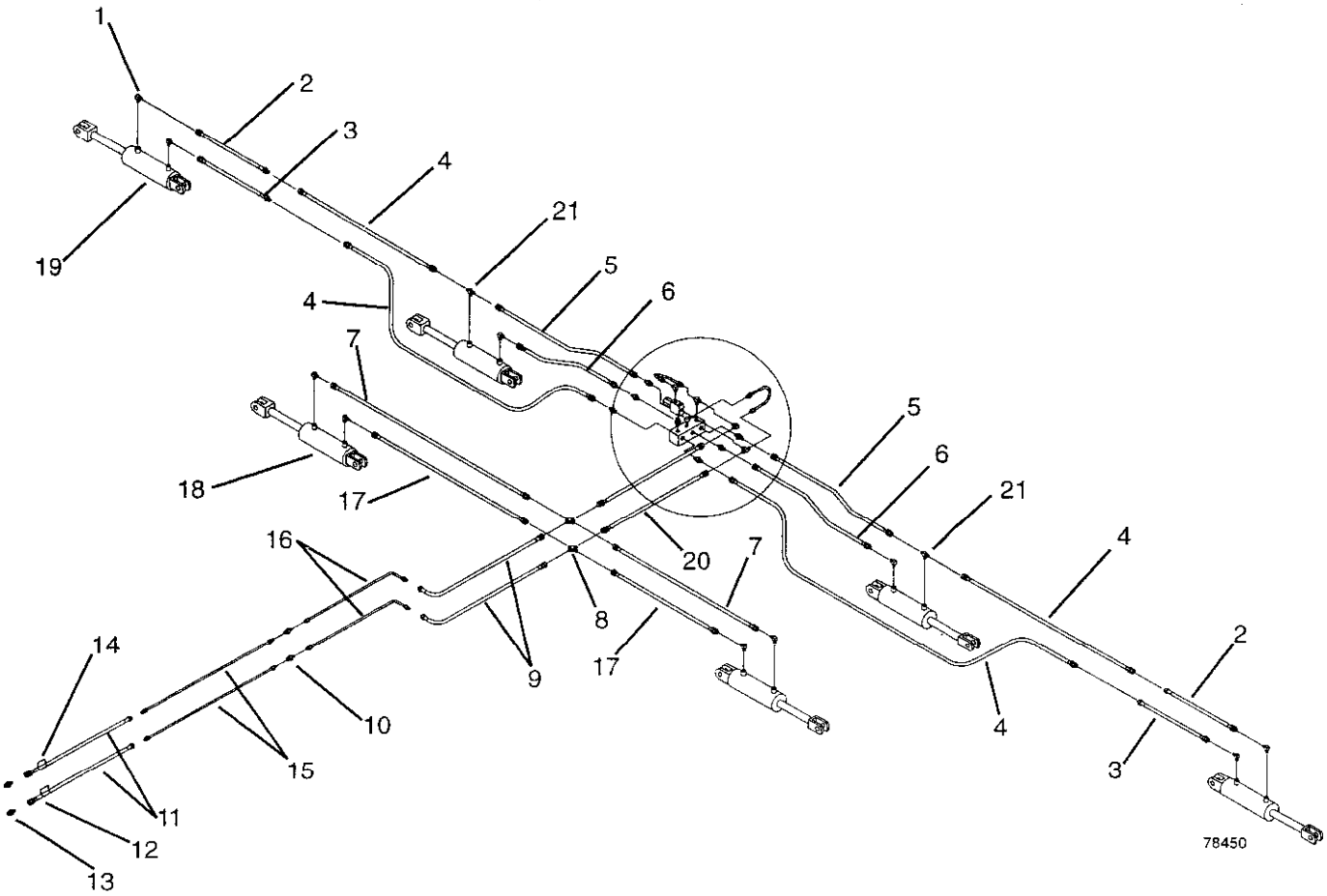

ITEM	PART NO	DESCRIPTION
1	13235	3/4JICx3/8NPT Port Elbow
2	13262	3/8x30 Hose MF
3	24182	3/8x84 Hose MF
4	13483	3/8x120 Hose FF
5	56540	3/8x89 Hose FF
6	13265	3/8x56 Hose FF
7	13268	3/8x78 Hose FF
8	15910	3/4JIC Tube Cross
9	13264	3/8x48 Hose MF
10	13239	3/4JIC Hose Union

ITEM	PART NO	DESCRIPTION
11	13267	3/8x72 Hose MF
12	54901	Wings Down Decal
13	13234	3/4JICx1/2NPT Coupler Adapter
14	54900	Wings Up Decal
15	13254	1/2x80 Hyd Tube
16	13258	1/2x60+2 Hyd Tube
17	56539	3/8x50 Hose FF
18	51229	4x30 Cylinder
19	51235	3-1/2x24 Cylinder
20	25603	3/8x75 Hose FF
21	13237	3/8 Cylinder Port Tee

WING LIFT HYDRAULICS

16'MF, 11'8" WING w/3' OR 5' OUTER WING
Serial Numbers 441249 & Below

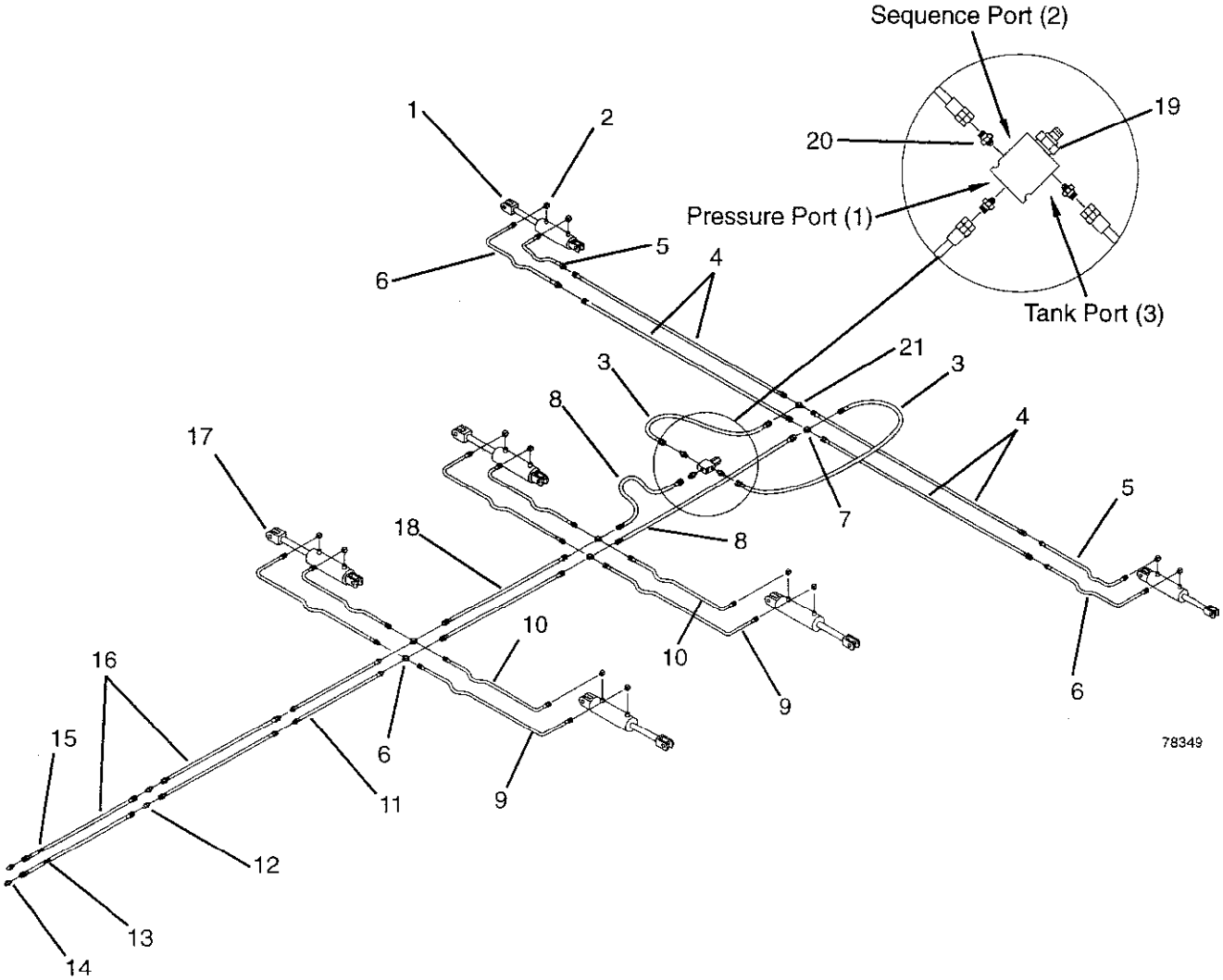

ITEM	PART NO	DESCRIPTION
1	51235	3-1/2x24 Cylinder
2	13235	3/4ICx3/8NPT Port Elbow
3	13423	3/8x24 Hose FF
4	13484	3/8x156 Hose FF
5	13260	3/8x24 Hose MF
6	13264	3/8x48 Hose MF
7	15910	3/4JIC Tube Cross
8	14850	3/8x18 Hose FF
9	13268	3/8x78 Hose FF
10	14851	3/8x42 Hose FF
11	13269	3/8x84 Hose MF

ITEM	PART NO	DESCRIPTION
12	13239	3/4JIC Hose Union
13	54901	Wing Down Decal
14	13234	3/4JICx1/2NPT Coupler Adapter
15	54900	Wing Up Decal
16	13482	3/8x108 Hose FF
17	51229	4x30 Cylinder
18	15515	3/8x62 Hose FF
19	51655	Sequence Valve
20	24024	3/4JICx3/4ORB Adapter
21	13238	3/4JIC Tube Tee

TEE BLOCK PLUMBING

FOR 3' & 5' OUTER WINGS

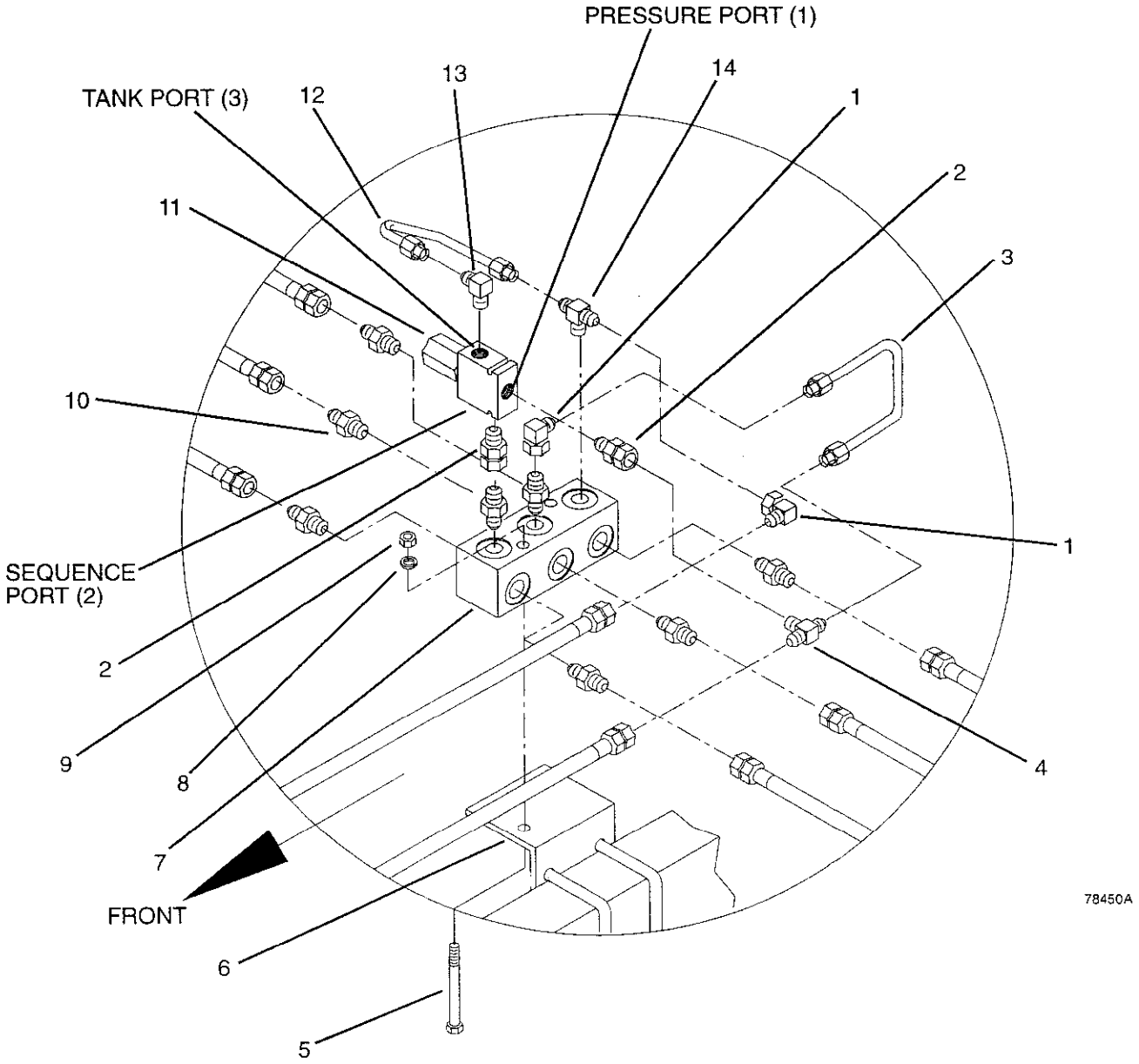

ITEM	PART NO	DESCRIPTION	ITEM	PART NO	DESCRIPTION
1	25591	3/4JICx3/4JIC Swivel	8	88362	3/8 Lock Washer
2	24004	3/4JICx3/4ORB Adapter	9	88103	3/8NC Nut
3	56538	1/2x3-1/4 U-Hyd Tube	10	24024	3/4JICx3/4ORB Union
4	13238	3/4JIC Tube Tee	11	51655	Sequence Valve
5	88531	3/8NCx3 GR5 Bolt	12	56537	1/2x5-1/8 U-Hyd Tube
6	56536	Manifold Block Mount	13	25580	3/4JICx3/4ORB Elbow
7	56535	Manifold Block	14	56534	3/4ICx3/4ORBx3/4JIC Tee

DEPTH CONTROL HYDRAULICS

11' MAIN FRAME w/ 7' OR 9'4" WING

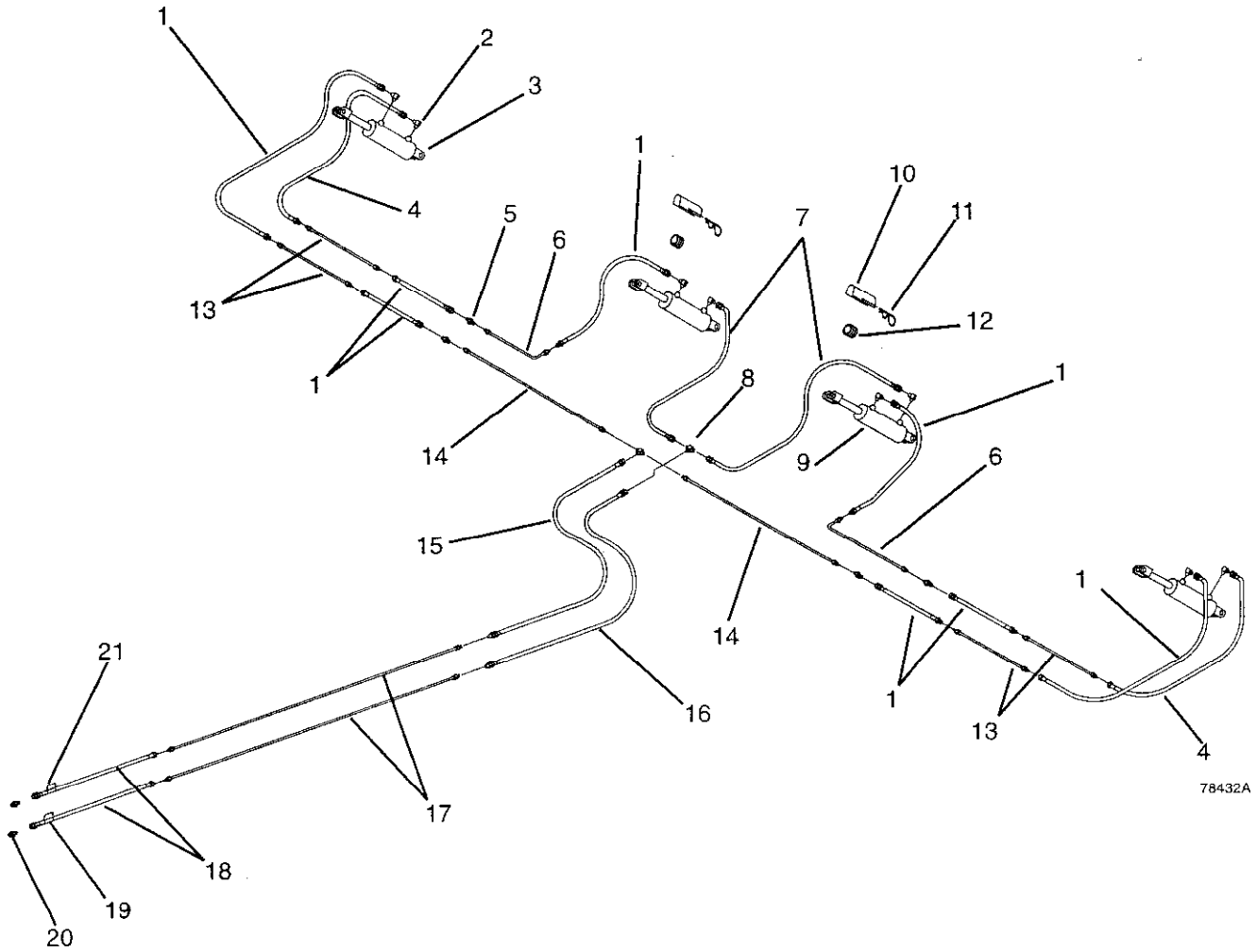

ITEM	PART NO	DESCRIPTION
1	13262	3/8x30 Hose MF
2	13236	3/4JICx1/2NPT Port Elbow
3	42579	4x8 Top Bypass Cylinder
4	13263	3/8x36 Hose MF
5	13239	3/4IC Hose Union
6	13258	1/2x60+2 Hyd Tube
7	14850	3/8x18 Hose FF
8	13238	3/4IJC Tube Tee
9	42580	4x9.3 Top Bypass Cylinder
10	13681	1-1/2IN Cylinder Lock Channel
11	42721	1/4x5 Spring Lock Pin
12	15113	1-1/2 Stop Collar

ITEM	PART NO	DESCRIPTION
13	13287	1/2x38 Hyd Tube (7' Wing)
	15811	1/2x65 Hyd Tube (9'4" Wing)
14	15811	1/2x65 Hyd Tube
15	13266	3/8x60 Hose MF
16	13269	3/8x84 Hose MF
17	13255	1/2x110 Hyd Tube
18	13267	3/8x72 Hose MF
19	54902	Main Up Decal
20	13234	3/4JICx1/2NPT Coupler Adapter
21	54903	3/8x72 Hose MF

DEPTH CONTROL HYDRAULICS

13' MAIN FRAME - 7' & 9'4" WINGS
Serial Numbers 441250 & up

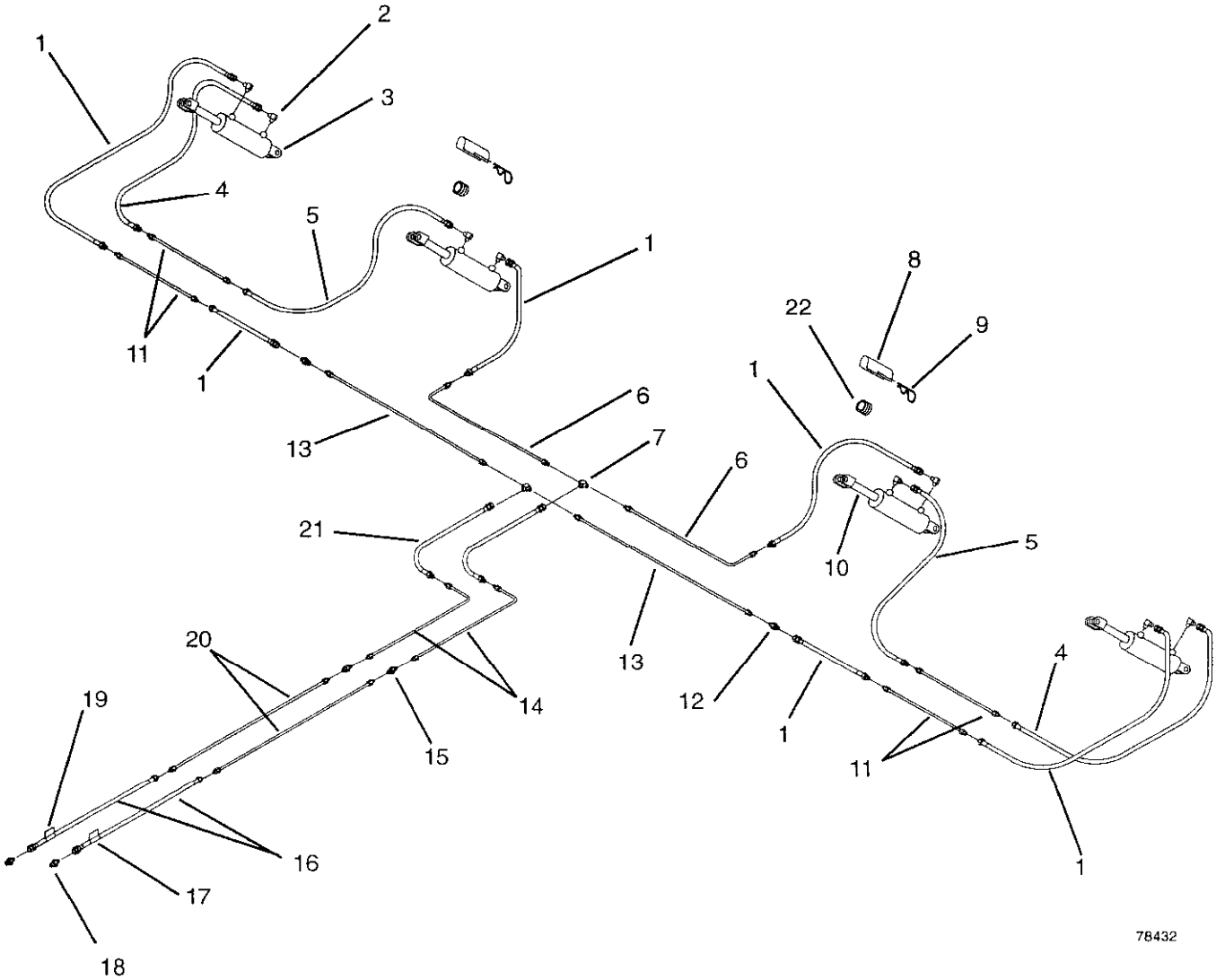

ITEM	PART NO	DESCRIPTION
1	13262	3/8x30 Hose MF
2	13236	3/4JICx1/2NPT Port Elbow
3	42579	4x8 Top Bypass Cylinder
4	13263	3/8x36 Hose MF
5	13264	3/8x48 Hose MF
6	20464	1/2x48+2 Hyd Tube
7	13238	3/4JIC Tube Tee
8	13681	1-1/2IN Cylinder Lock Channel
9	42721	1/4x5 Spring Lock Pin
10	42580	4x9.3 Top Bypass Cylinder
11	13287	1/2x38 Hyd Tube (7' Wing)
	15811	1/2x65 Hyd Tube (9'4" Wing)

ITEM	PART NO	DESCRIPTION
12	13239	3/4JIC Union
13	21037	1/2x72 Hyd Tube
14	13258	1/2x60+2 Hyd Tube
15	13239	3/4JIC Union
16	13267	3/8x72 Hose MF
17	54902	Main Up Decal
18	13234	3/4JICx1/2NPT Coupler Adapter
19	54903	Main Down Decal
20	20465	1/2x48 Hyd Tube
21	13259	3/8x18 Hose MF
22	15113	1-1/2 Stop Collar

DEPTH CONTROL HYDRAULICS

13' MAIN FRAME, 7' & 9'4" WINGS
Serial Numbers 441249 & Below

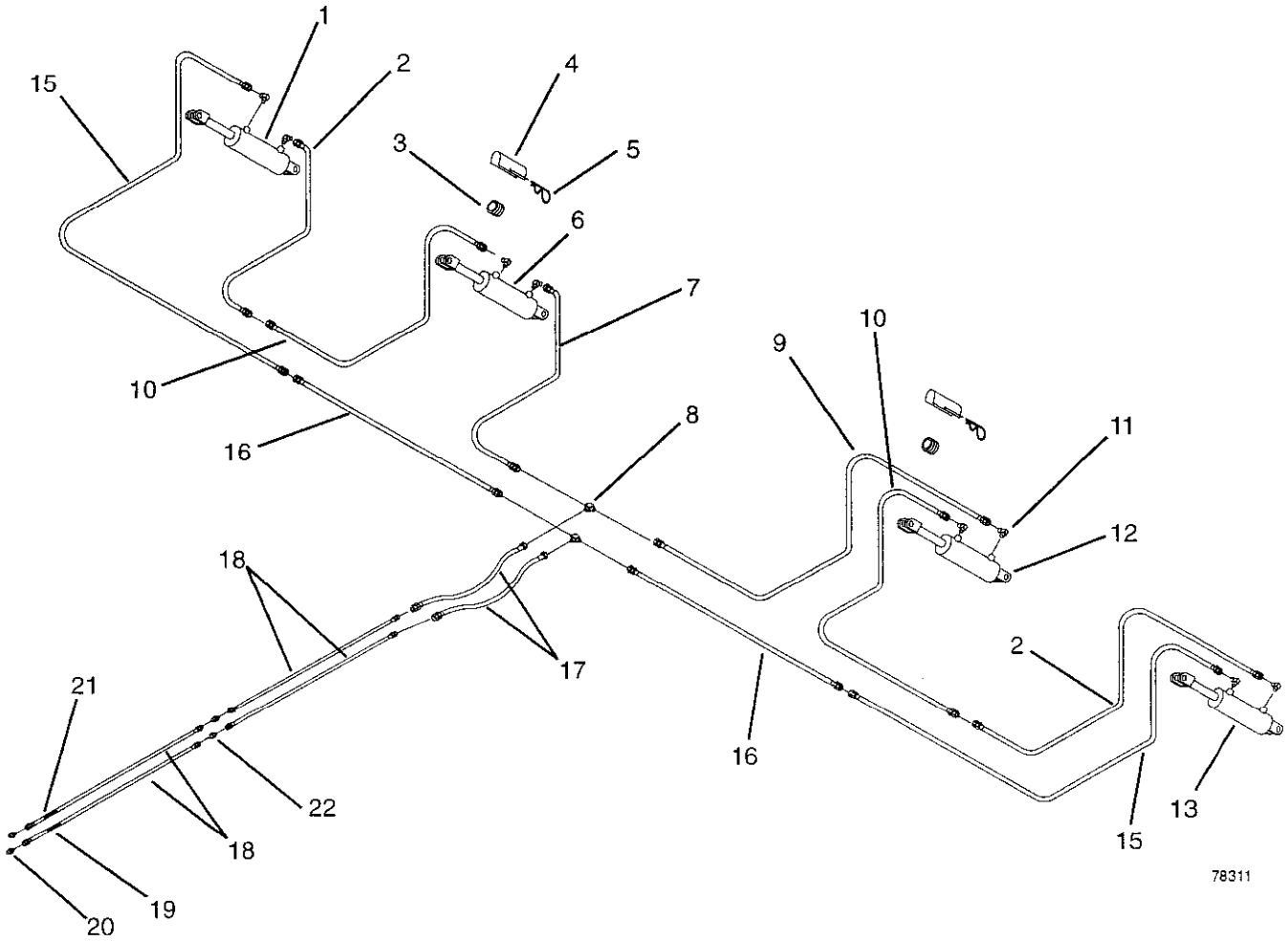

ITEM	PART NO	DESCRIPTION
1	42579	4x8 Top Bypass Cylinder
2	13265	3/8x56 Hose FF
3	15113	1-1/2" Stop Collar
4	13681	1-1/2" Cylinder Lock Channel
5	42471	1/4x5 Spring Lock Pin
6	42480	4x9.3 Top Bypass Cylinder
7	15515	3/8x62 Hose FF
8	13238	3/4JIC Tube Tee
9	15515	3/8x62 Hose FF
10	13267	3/8x72 Hose MF (9'4" Wing)
	13264	3/8x48 Hose MF (7' Wing)
11	13236	3/4JICx3/8NPT Port Elbow

ITEM	PART NO	DESCRIPTION
12	42580	4x9.3 Top Bypass Cylinder
13	42579	4x8 Top Bypass Cylinder
15	13482	3/8x108 Hose FF
16	13267	3/8x72 Hose MF (9'4" Wing)
	13264	3/8x48 Hose MF (7' Wing)
17	13263	3/8x36 Hose MF
18	13482	3/8x108 Hose FF
19	54903	Main Down Decal
20	13234	3/4JICx1/2NPT Coupler Adapter
21	54902	Main Up Decal
22	13239	3/4JIC Hose Union

DEPTH CONTROL HYDRAULICS

13' & 16' MF - 11'8" WINGS
Serial Numbers 441250 & up

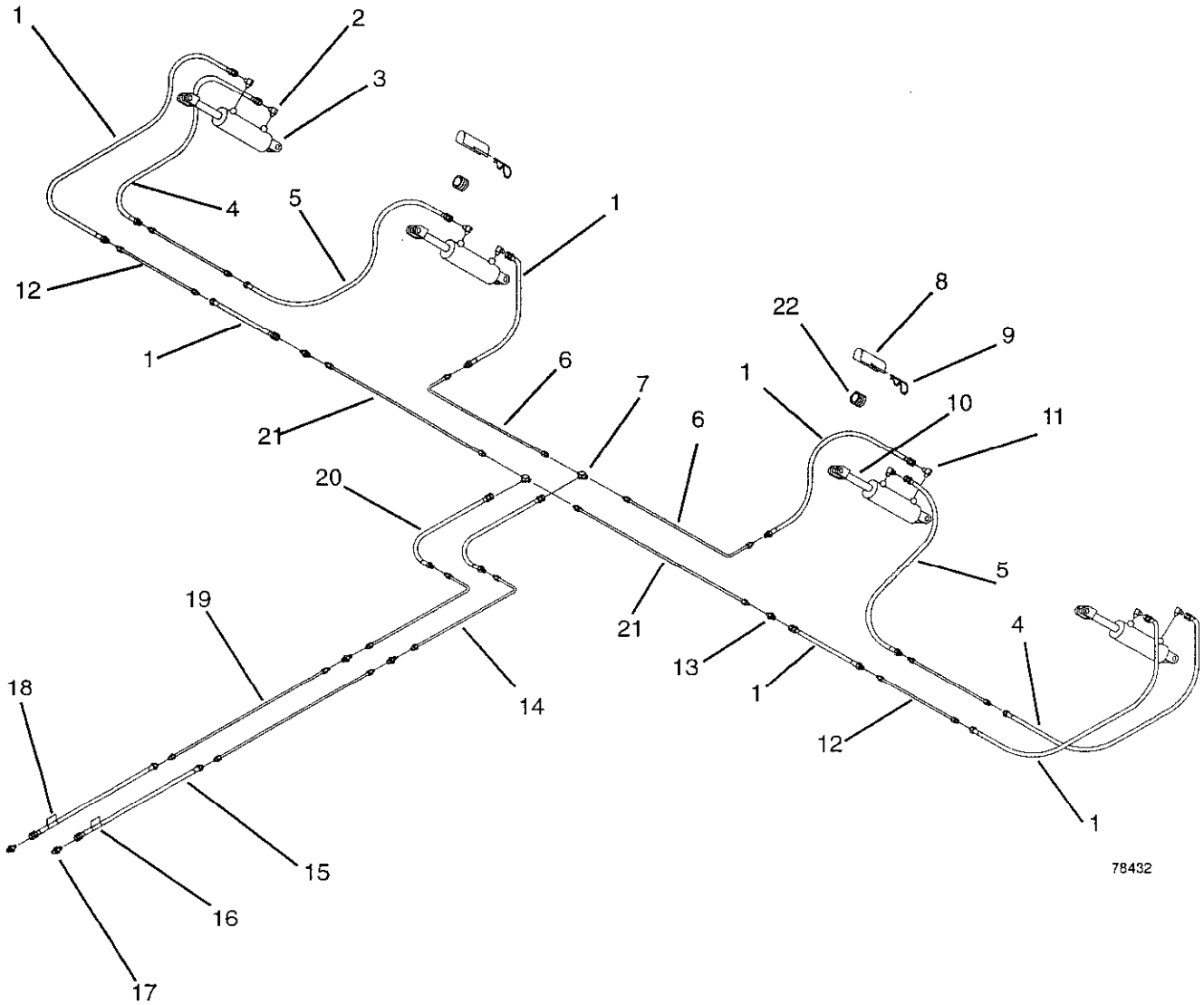

ITEM	PART NO	DESCRIPTION
1	13262	3/8x30 Hose MF
2	13236	3/4JICx1/2NPT Port Elbow
3	42579	4x8 Top Bypass Cylinder
4	13263	3/8x36 Hose MF
5	13264	3/8x48 Hose MF
6	20464	1/2x48+2 Hyd Tube (13'MF)
	13258	1/2x60+2 Hyd Tube (16'MF)
7	13238	3/4JIC Tube Tee
8	13681	1-1/2" Cylinder Lock Channel
9	42721	1/4x5 Spring Lock Pin
10	42580	4x9.3 Top Bypass Cylinder
11	13236	1/2NPTx3/4JIC Port Elbow

ITEM	PART NO	DESCRIPTION
12	15699	1/2x86 Hyd Tube
13	13239	3/4JIC Hose Union
14	13258	1/2x60+2 Hyd Tube
15	13267	3/8x72 Hose MF
16	54902	Main Up Decal
17	13234	3/4ICx1/2NPT Coupler Adapter
18	54903	Main Down Decal
19	20465	1/2x48Hyd Tube (13'MF)
	13254	1/2x80 Hyd Tube (16'MF)
20	13259	3/8x18 Hose (MF)
21	21037	1/2x72 Hyd Tube (13'MF)
	15699	1/2x86 Hyd Tube (16'MF)
22	15113	1-1/2 Stop Collar

DEPTH CONTROL HYDRAULICS

13' & 16' MAIN FRAME, 11'8" WINGS
Serial Numbers 441249 & Below

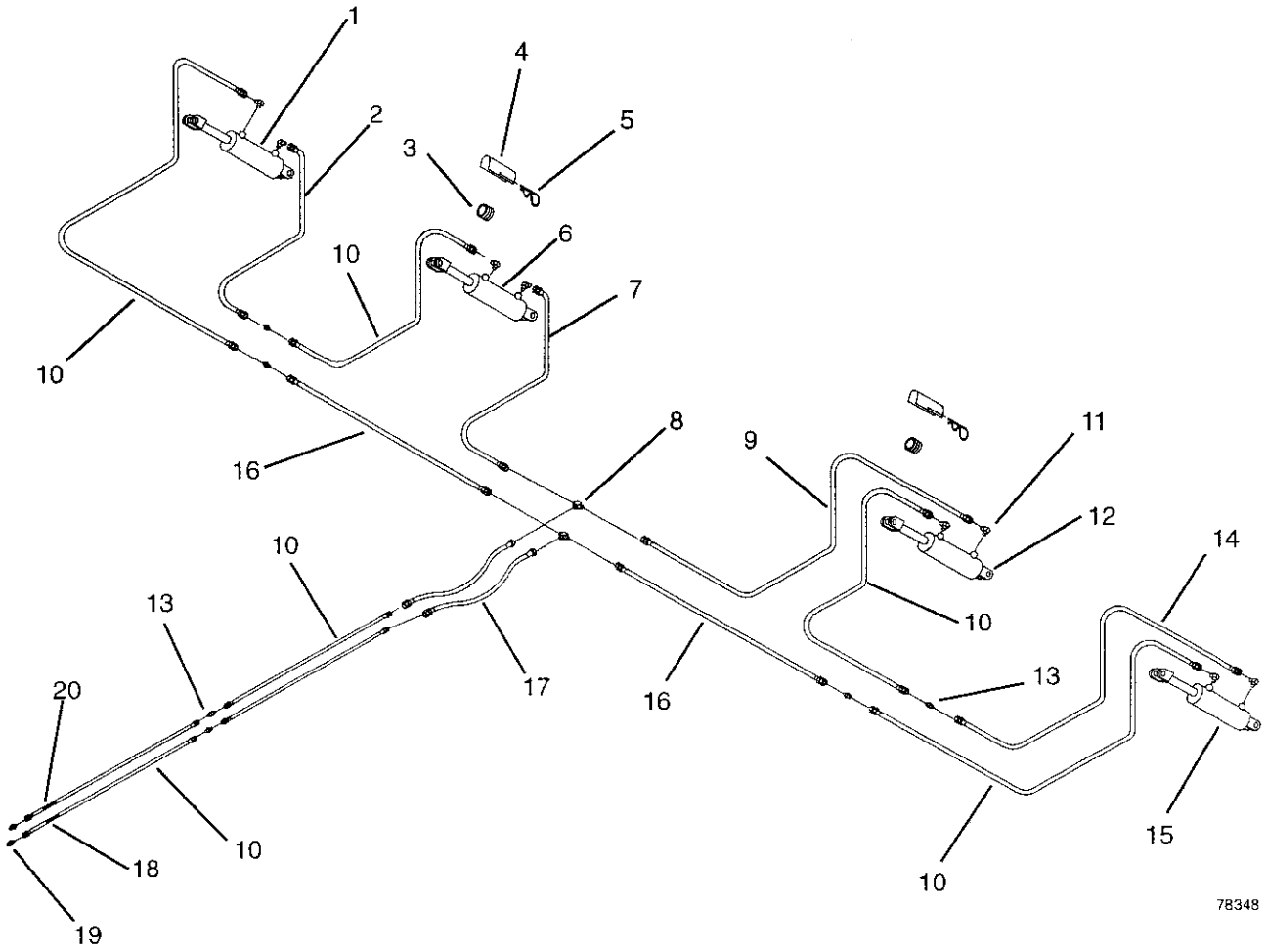

ITEM	PART NO	DESCRIPTION
1	42579	4x8 Top Bypass Cylinder
2	13265	3/8x56 Hose FF
3	15113	1-1/2" Stop Collar
4	13681	1-1/2" Cylinder Lock Collar
5	42721	1/4x5 Spring Lock Pin
6	42580	4x9.3 Top Bypass Cylinder
7	15515	3/8x62 Hose FF (13'MF)
	13268	3/8x78 Hose FF (16'MF)
8	13238	3/4JIC Tube Tee
9	15515	3/8x62 Hose FF
	13268	3/8x78 Hose FF (16'MF)
10	13482	3/8x108 Hose FF

ITEM	PART NO	DESCRIPTION
11	13236	3/4JICx3/8NPT Port Elbow
12	42580	4x9.3 Top Bypass Cylinder
13	13239	3/4JIC Hose Union
14	13265	3/8x56 Hose FF
15	42579	4x8 Top Bypass Cylinder
16	13482	3/8x108 Hose FF (13'MF)
	13483	3/8x120 Hose FF (16'MF)
17	13263	3/8x36 Hose MF
18	54903	Main Down Decal
19	13234	3/4ICx1/2NPT Coupler Adapter
20	54902	Main Up Decal

4x8 TOP BYPASS Series PX & Series PB

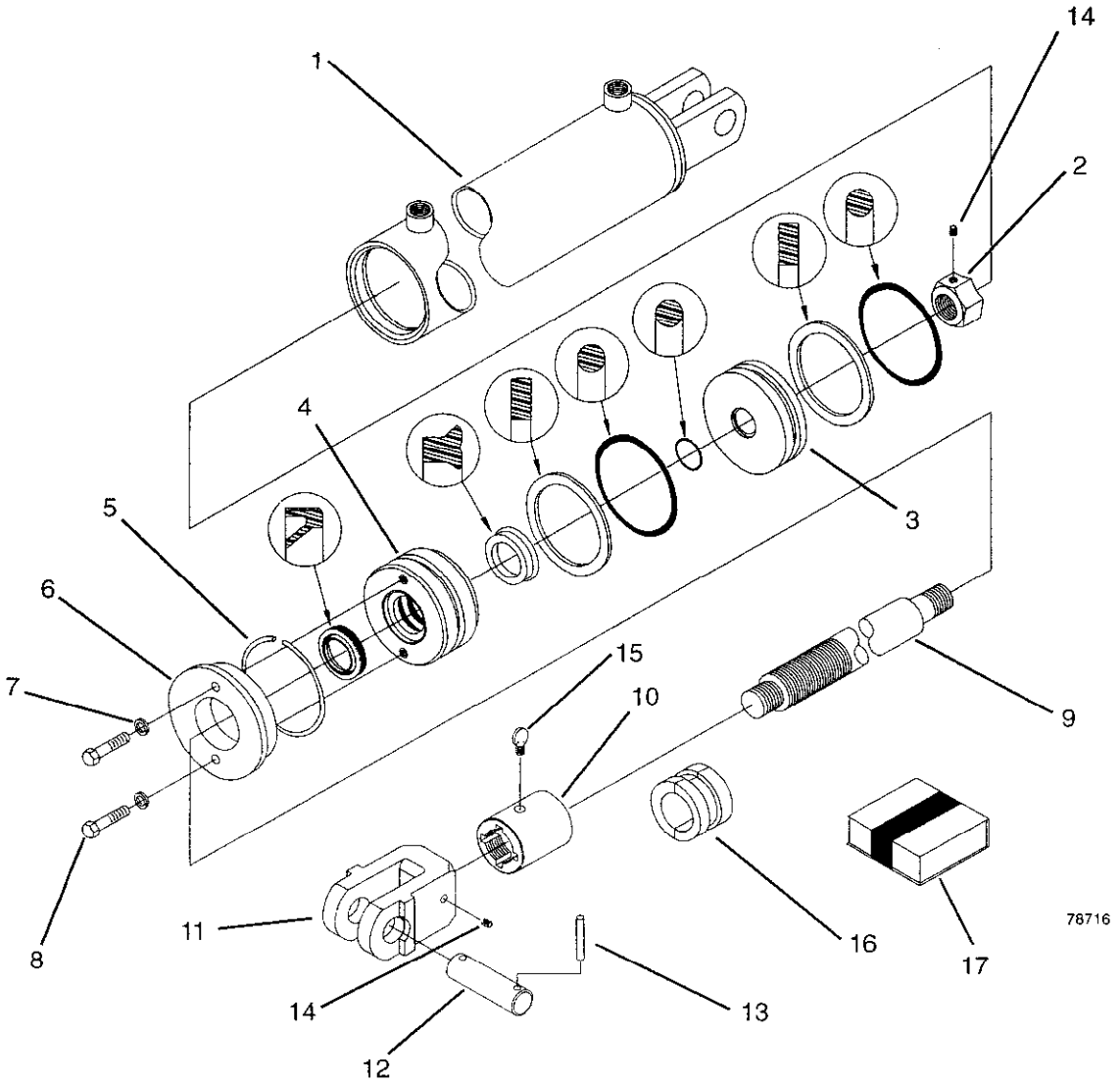

ITEM	PART NO	DESCRIPTION
	42579	4x8 Top Bypass Cylinder
1	42573	4x8 Cylinder Tube Assy TBP
2	14824	Piston Lock Nut
3	42577	Piston
4	42576	End Gland
5	12286	4" Cylinder Snap Ring
6	13851	Stop Plate 4x8
7	88362	3/8Lock Washer
8	88553	3/8NCx1-1/2 GR5 Bolt
9	13569	4x8 Cylinder Rod

ITEM	PART NO	DESCRIPTION
10	13570	Stop Collar Screw Stop
11	14822	Cylinder Yoke
12	62404	Cylinder Pin
13	42484	Cylinder Lock Pin
14	88706	Set Screw 5/16NCx5/16
15	88387	Thumb Screw 3/8NCx3/4
16	15113	Stop Collar 1-1/2
17	42664	Seal Kit (Series #PX-All)
	14906	Seal Kit (Series #PB-10,000 & Up)
	14537	Seal Kit (Series #PB-10,000 & Below)

4x9.3 TOP BYPASS Series PE & Series PY

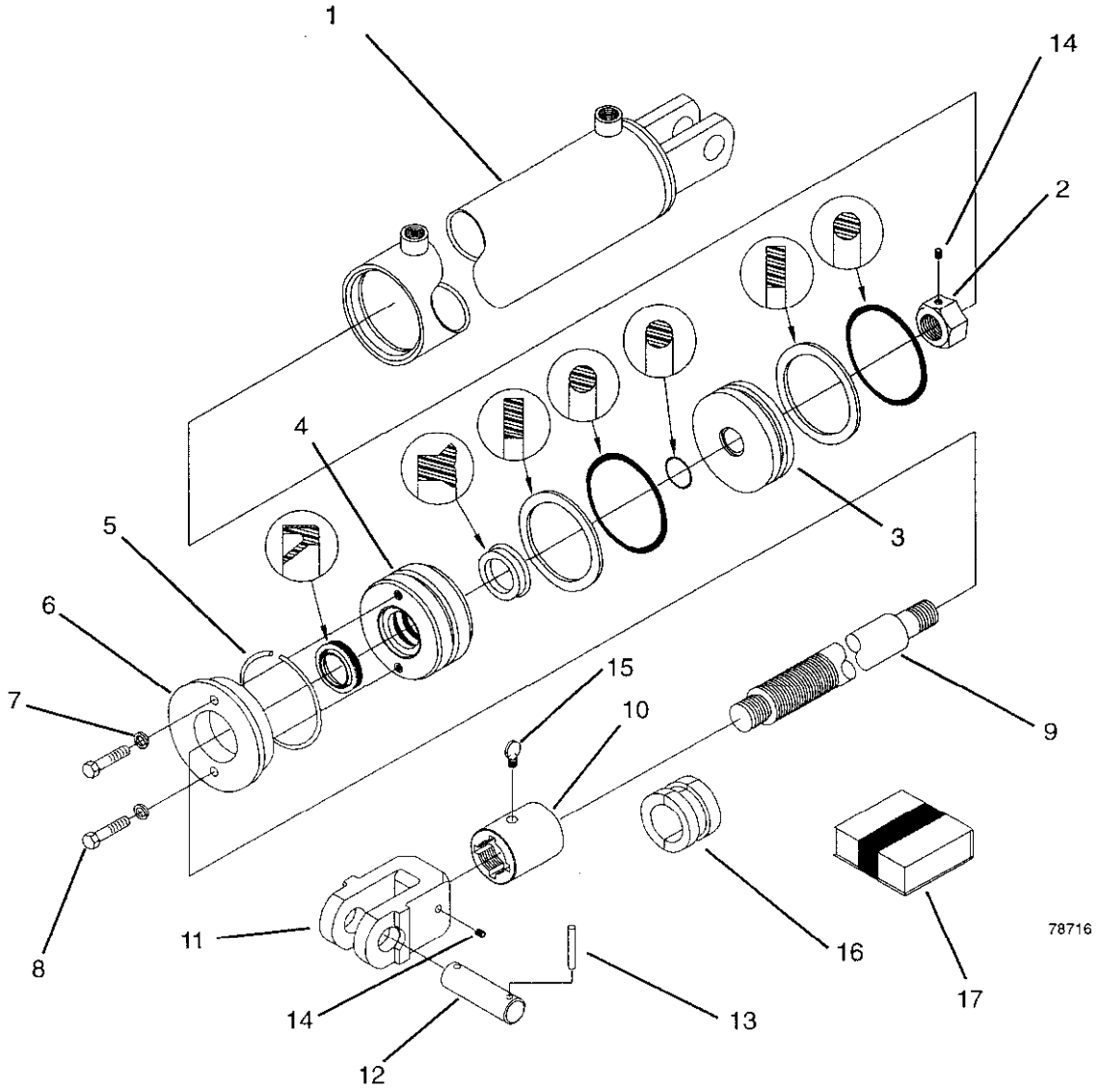

ITEM	PART NO	DESCRIPTION
	42580	4x9.3 Top Bypass Cylinder
1	42574	4x9.3 Cylinder Tube Assy TBP
2	14824	Piston Lock Nut
3	42577	Piston
4	42576	End Gland
5	12286	4" Cylinder Snap Ring
6	13851	Stop Plate 4x8
7	88362	3/8Lock Washer
8	88553	3/8NCx1-1/2 GR5 Bolt
9	16221	4x9.3 Cylinder Rod

ITEM	PART NO	DESCRIPTION
10	13570	Stop Collar Screw Stop
11	14822	Cylinder Yoke
12	62404	Cylinder Pin
13	42484	Cylinder Lock Pin
14	88706	Set Screw 5/16NCx5/16
15	88387	Thumb Screw 3/8NCx3/4
16	15113	Stop Collar 1-1/2
17	42664	Seal Kit (Series #PX-All)
	14906	Seal Kit (Series #PE- All)

3-1/2x24 STANDARD Series O & Series RF

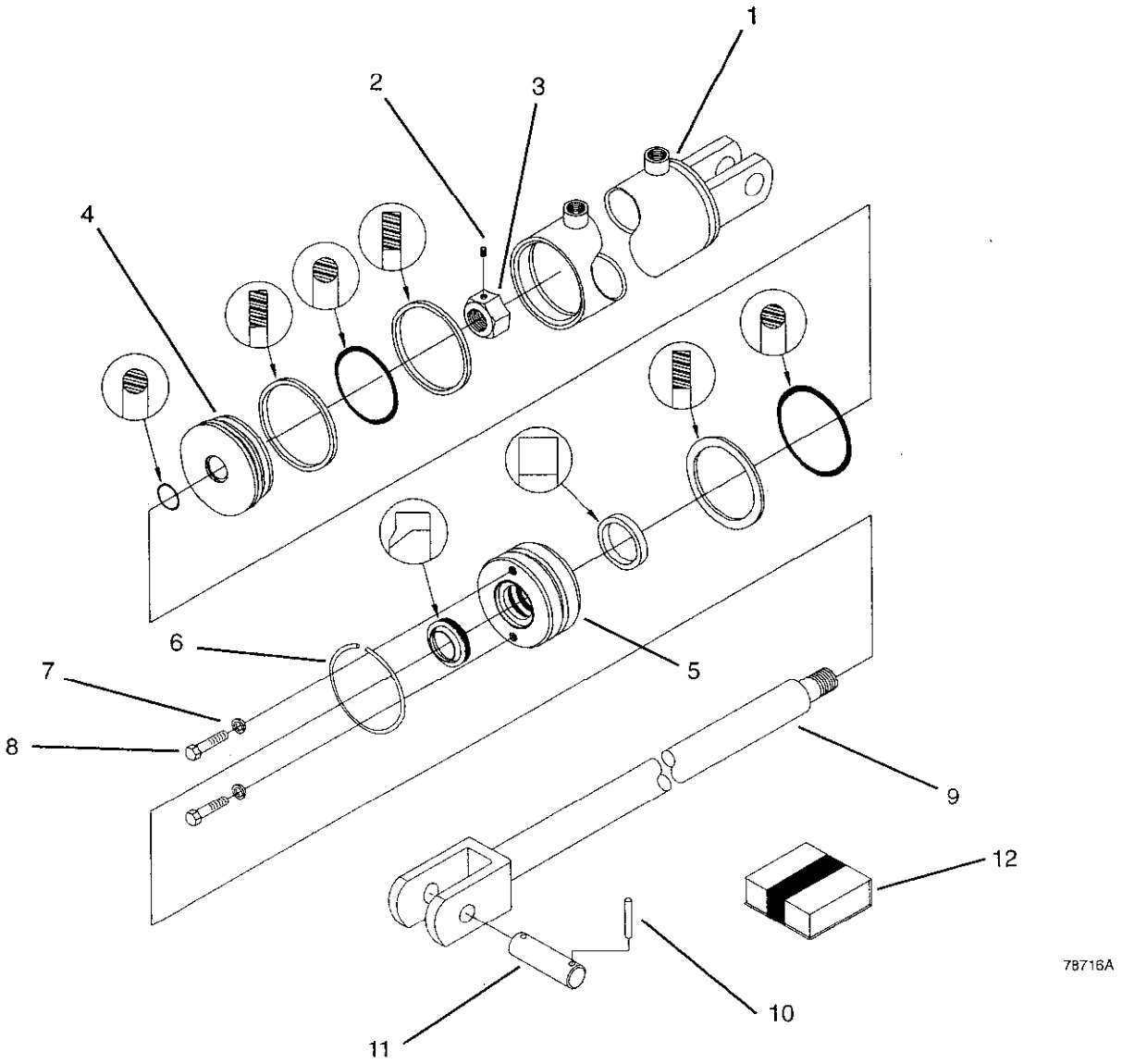

ITEM	PART NO	DESCRIPTION
	51235	3-1/2x24 Standard
1	55697	3-1/2x24 Cylinder Tube Assembly
2	88706	Set Screw 5/16NCx5/16
3	14824	Piston Lock Nut
4	12299	Cylinder Piston
5	51207	3-1/2 Cylinder Gland
6	12293	3-1/2 Cylinder Snap Ring
7	88855	1/4 Flat Washer
8	88190	1/4NCx1/2 Bolt
9	12302	Cylinder Rod Assembly
10	42484	Cylinder Lock Pin
11	42472	Cylinder Pin
12	51211	Seal Kit (Series#RF - All)
	14905	Seal Kit (Series#O-10,000 & Up)

4x30 STANDARD Series KA & Series RD

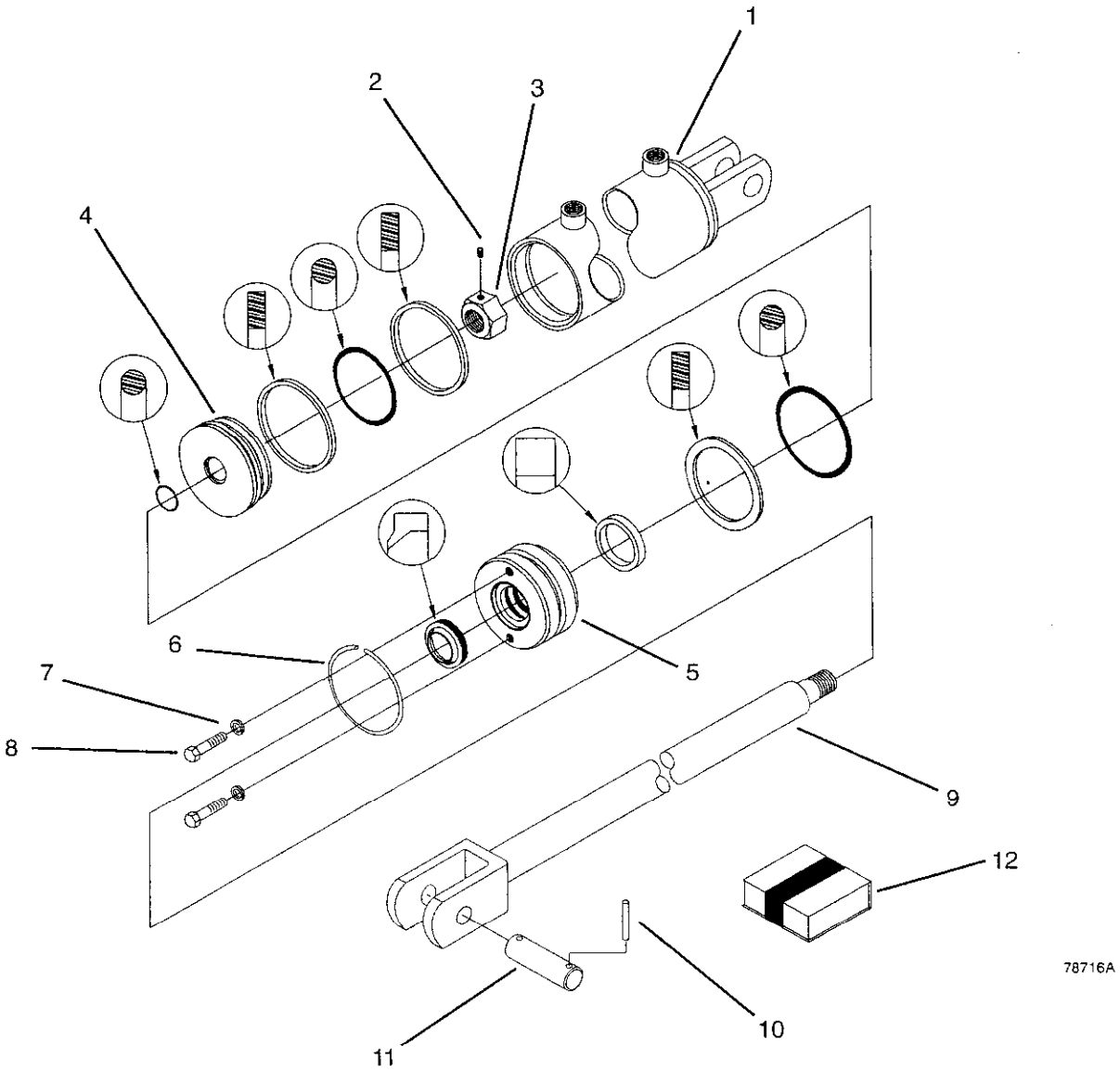

ITEM	PART NO	DESCRIPTION
	51229	4x30 Standard
1	20961	4x30 Cylinder Tube Assembly
2	88706	Set Screw 5/16NCx5/16
3	14824	Piston Lock Nut
4	12282	Cylinder Piston
5	42576	End Gland
6	12286	4" Cylinder Snap Ring

ITEM	PART NO	DESCRIPTION
7	88278	5/16 Flat Washer
8	88566	3/8NCx3/4 GR5 Bolt
9	20963	4x30 Cylinder Rod Assembly
10	42484	Cylinder Lock Pin
11	42473	Cylinder Pin
12	14907	Seal Kit (Series # KA-All)
	51212	Seal Kit (Series # RD-All)

C-SHANK ASSEMBLY

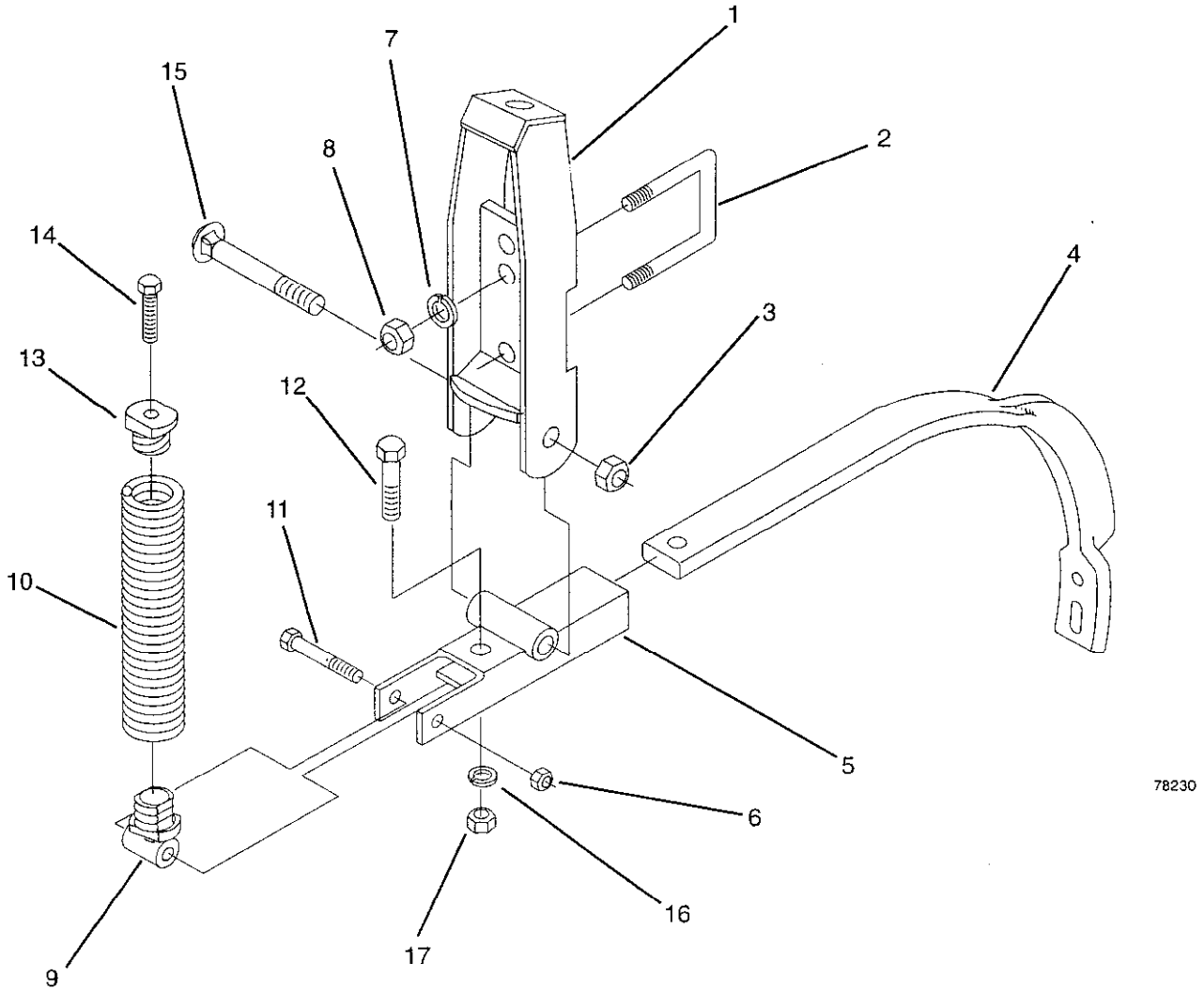

ITEM	PART NO	DESCRIPTION
	53405	Edge Formed FC Shank Assy
		(Includes Items 1, 3-6 & 9-17)
	20570	FC Shank Assembly (4")
		(Includes Items 1, 3-6 & 9-17)
	11540	Spring Plug Assembly
		(Includes Items 9-10 & 13)
1	20569	Shank to Frame Bracket
2	88501	5/8NCx4x4-1/4 U-Bolt
3	22463	3/4NF Lock Nut
4	53408	Edge Formed FC Shank (Shown)
	11511	FC Shank
5	11509	Shank Holder Assembly

ITEM	PART NO	DESCRIPTION
6	88304	1/2NF Lock Nut
7	88129	5/8 Lock Washer
8	88126	5/8NC Nut
9	11397	Spring Handle
10	11510	Spring
11	20637	1/2NFx3 GR5 Bolt
12	88294	5/8NCx2 GR5 Bolt
13	11398	Spring Plug
14	23153	1/2NCx2 GR5 Bolt
15	15579	Shank Carriage Bolt
16	88129	5/8NC Lock Washer
17	88126	5/8NC Nut

HI-TORQUE SHANK ASSEMBLY

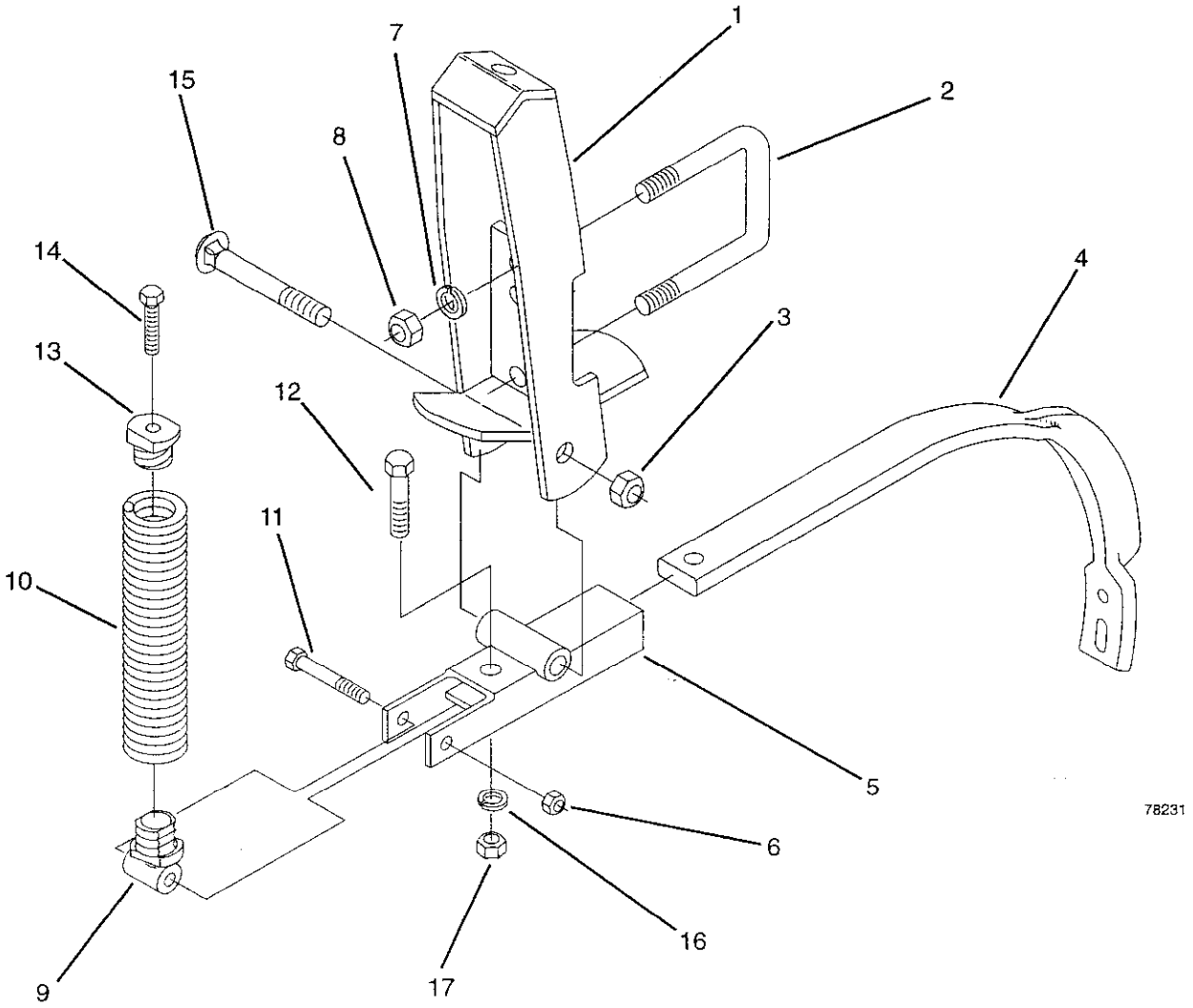

ITEM	PART NO	DESCRIPTION
	53406	Hi-Torqu Edge Formed FC Shank Assy (Includes Items 1, 3-6 & 9-17)
	41892	Hi-Torque FC Shank Assy (Includes Items 1, 3-6 & 9-17)
	11540	Spring Plug Assembly (Includes Items 9-10 & 13)
1	41891	Hi-Torque Spring Bracket
2	88501	5/8NCx4x4-1/4 U-Bolt
3	47926	Cone Base Nylon Lock Nut
4	53408	Edge Formed Shank (Shown)
	21535	FC Shank
5	27050	Shank Holder Assembly

ITEM	PART NO	DESCRIPTION
6	88304	1/2NF Lock Nut
7	88129	5/8 Lock Washer
8	88126	5/8NC Nut
9	11397	Spring Handle
10	11510	Spring
11	20637	1/2NFx3 GR5 Bolt
12	88294	5/8NCx2 GR5 Bolt
13	11398	Spring Plug
14	23153	1/2NCx2 GR5 Bolt
15	15579	Shank Carriage Bolt
16	88129	5/8NC Lock Washer
17	88126	5/8NC Nut

TWIN SPRING SHANK ASSEMBLY

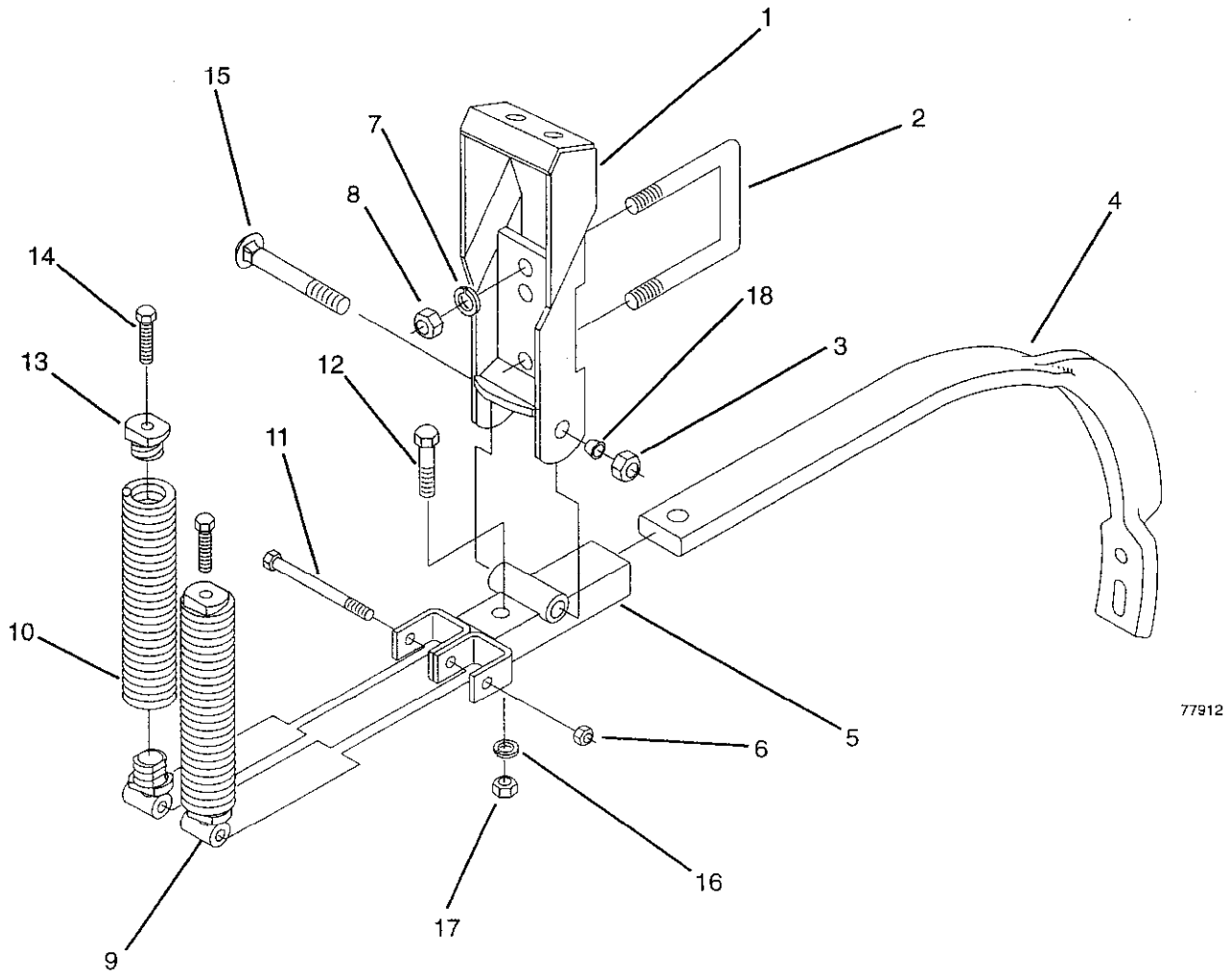

ITEM	PART NO	DESCRIPTION
	55658	Twin Spring Edge Formed FC Shank Assy (Includes Items 1, 3-6 & 9-17)
	11540	Spring Plug Assembly (Includes Items 9-10 & 13)
1	22047	Twin Spring Bracket
2	88501	5/8NCx4x4-1/4 U-Bolt
3	22463	3/4NC Lock Nut
4	55655	HD Edge Formed Shank (Shown)
	21535	HD Shank
5	22051	Shank Holder Assembly
6	88363	1/2NC Lock Nut
7	88129	5/8 Lock Washer

ITEM	PART NO	DESCRIPTION
8	88126	5/8NC Nut
9	11397	Spring Handle
10	11510	Spring
11	88574	1/2NCx5-1/2 GR5 Bolt
12	88294	5/8NCx2 GR5 Bolt
13	11398	Spring Plug
14	23153	1/2NCx2 GR5 Bolt
15	22933	3/4NFx4-1/2 GR5 Bolt
16	88129	5/8NC Lock Washer
17	88126	5/8NC Nut
18	41452	Centering Washer

SHOVELS & SPIKES

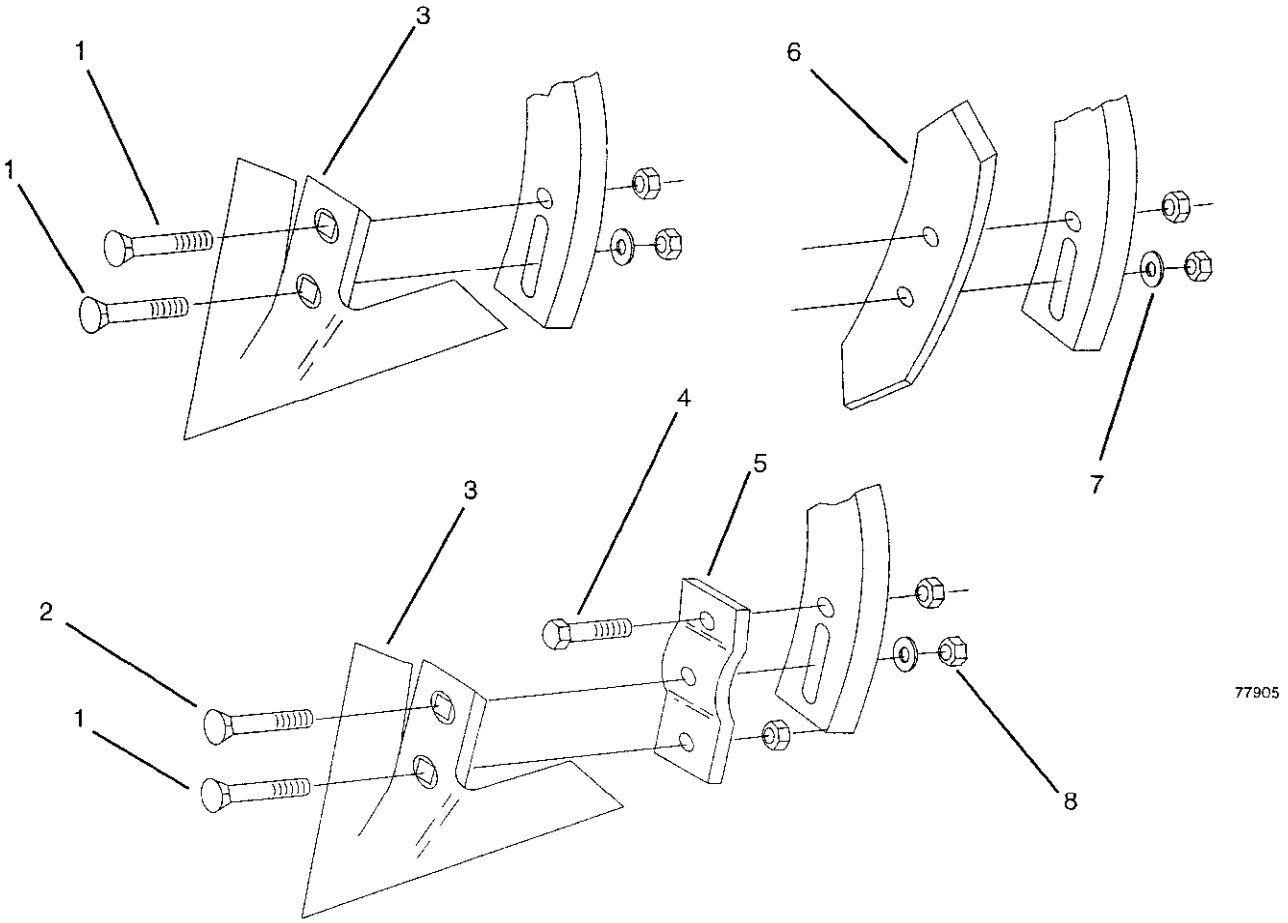

ITEM	PART NO	DESCRIPTION
	14685	HK 7/16x1-1/2 FC Shovel Kit (25) (Ref. Items1, 7-8 Contains HDW for 25 Shovels)
	16339	FC Shovel Extension Kit (Ref Items 1-2, 4-5 & 7-8 Kit Contains HDW for 4 Shovels)
1	88599	Plow Bolt 7/16NCx1-1/2 GR5
	88632	Plow Bolt 7/16NCx1-3/4 GR5 (Repair Head)
2	88464	Plow Bolt 7/16NCx2-1/4 GR5

ITEM	PART NO	DESCRIPTION
3	19802	7" High Crown Shovel
	19803	9" High Crown Shovel
	15221	9" Dura-Crown Shovel (924)
	21488	7" Low Crown Shovel (924)
	21489	9" Low Crown Shovel (924)
	21490	10" Low Crown Shovel (924)
	21491	12" Low Crown Shovel (924)
	21492	10" High Crown FC Shovel
	21493	12" High Crown FC Shovel
	41638	4" Sweep (41°) S-Shank
	41639	7" Sweep (41°) S-Shank
	41640	9" Sweep (41°) S-Shank
4	88392	7/16NCx1-1/2 Bolt
5	41575	FC Shovel Extension
6	11952	2" Reversible Spike
7	88152	7/16 Flat Washer
8	88344	7/16NC Nut

1-3/4" HUB & SPINDLE

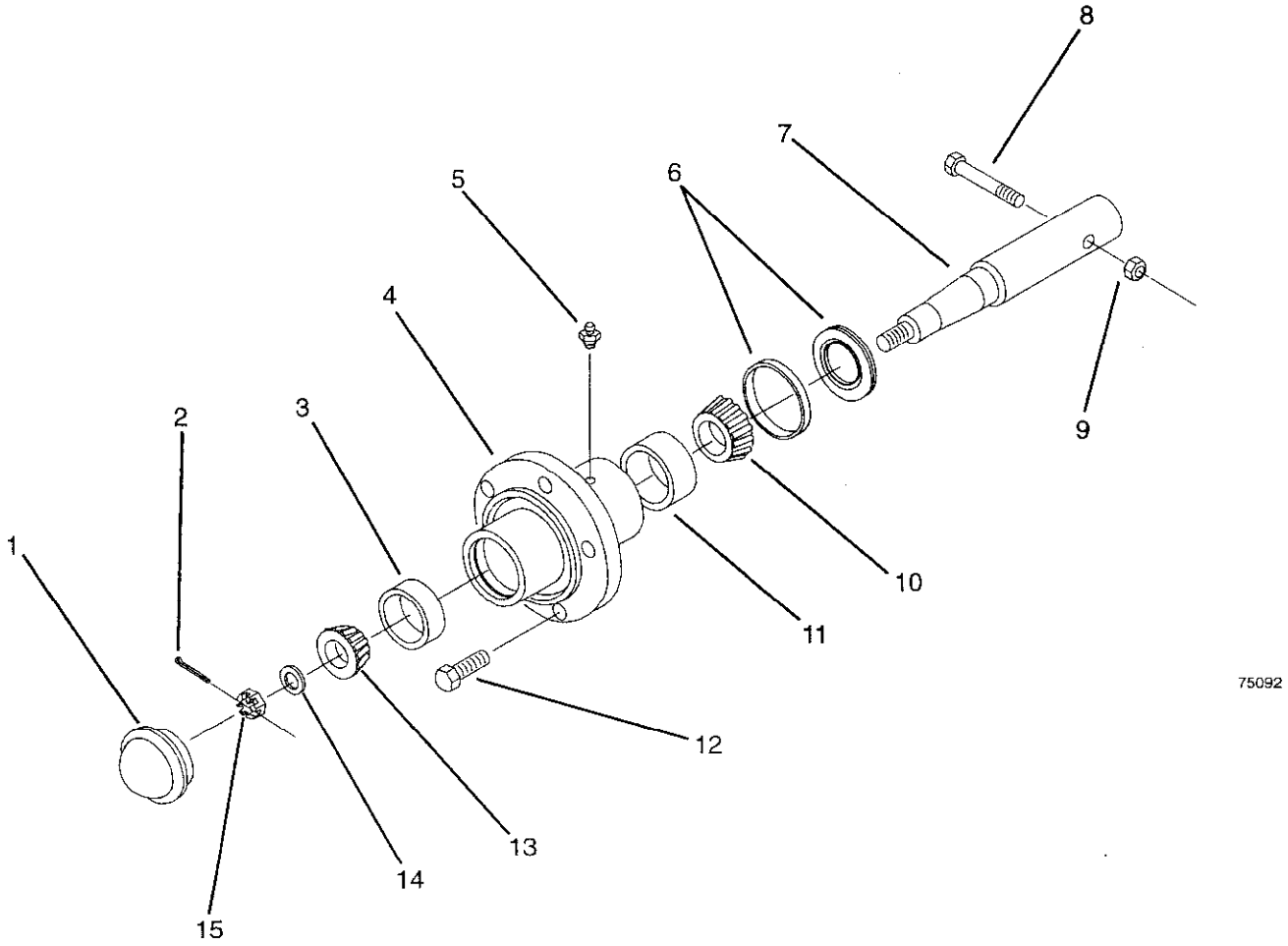

ITEM	PART NO	DESCRIPTION
	41233	Hub & Spindle Assembly
		(Includes Items 1-7 & 10-15)
1	11381	Dust Cap
2	88301	3/16x1-1/2 Cotter Pin
3	10344	Outer Bearing Cup
4	30405	6 Bolt Hub w/cups
		(Includes Items 3, 5 & 11)
5	88263	1/8NPT Grease Fitting
6	26121	Wear Sleeve & Seal Kit
	25585	Triple Lip Seal (1.62ID)
	25586	Wear Sleeve
	76333	Assembly Instructions

ITEM	PART NO	DESCRIPTION
7	41232	1-3/4 Spindle
8	88313	1/2NFx3 GR5 Bolt
9	88304	1/2NF Lock Nut
10	11378	Inner Bearig Cone
11	11379	Inner Bearing Cup
12	88142	1/2NFx1 90 Wheel Bolt
13	10345	Outer Bearing Cone
14	16094	7/8 Spindle Washer
15	88340	7/8NF Slotted Nut

2" HUB & SPINDLE

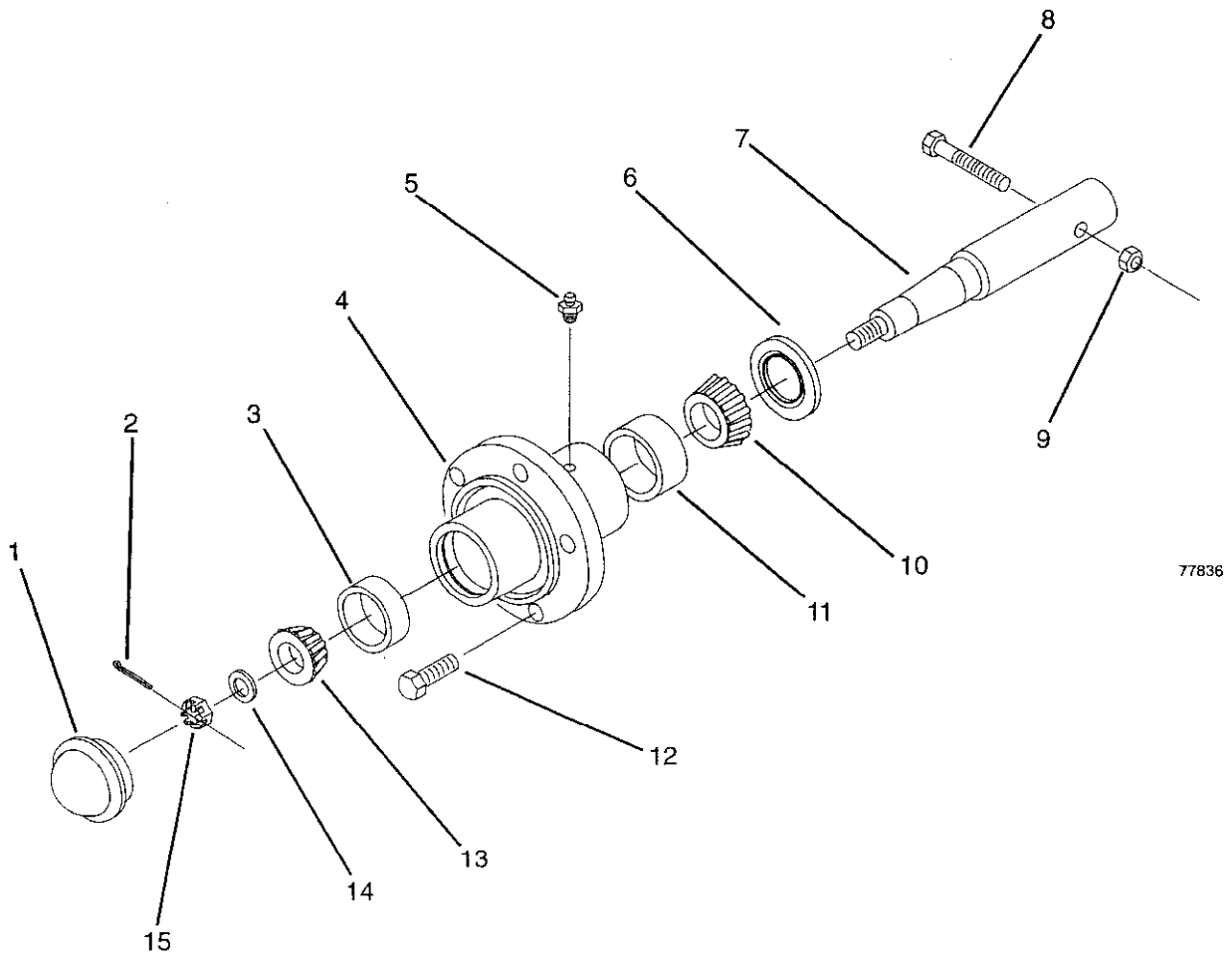

ITEM	PART NO	DESCRIPTION
	14131	2" Hub & Spindle Assembly (Includes Items 1-7 & 10-15)
1	11381	Dust Cap
2	88301	3/16x1-1/2 Cotter Pin
3	10344	Outer Bearing Cup
4	24097	2" Pressed Hub (Includes Items 3, 5 & 11)
5	88263	1/8NPT Grease Fitting
6	58546	Grease Seal

ITEM	PART NO	DESCRIPTION
7	14251	2" Spindle
8	88429	1/2NFx3-1/4 GR5 Bolt
9	88304	1/2NF Lock Nut
10	14248	Inner Bearig Cone
11	14249	Inner Bearing Cup
12	88142	1/2NFx1 90 Wheel Bolt
13	10345	Outer Bearing Cone
14	16094	7/8 Spindle Washer
15	88340	7/8NF Slotted Nut

GAUGE WHEEL HUB & SPINDLE

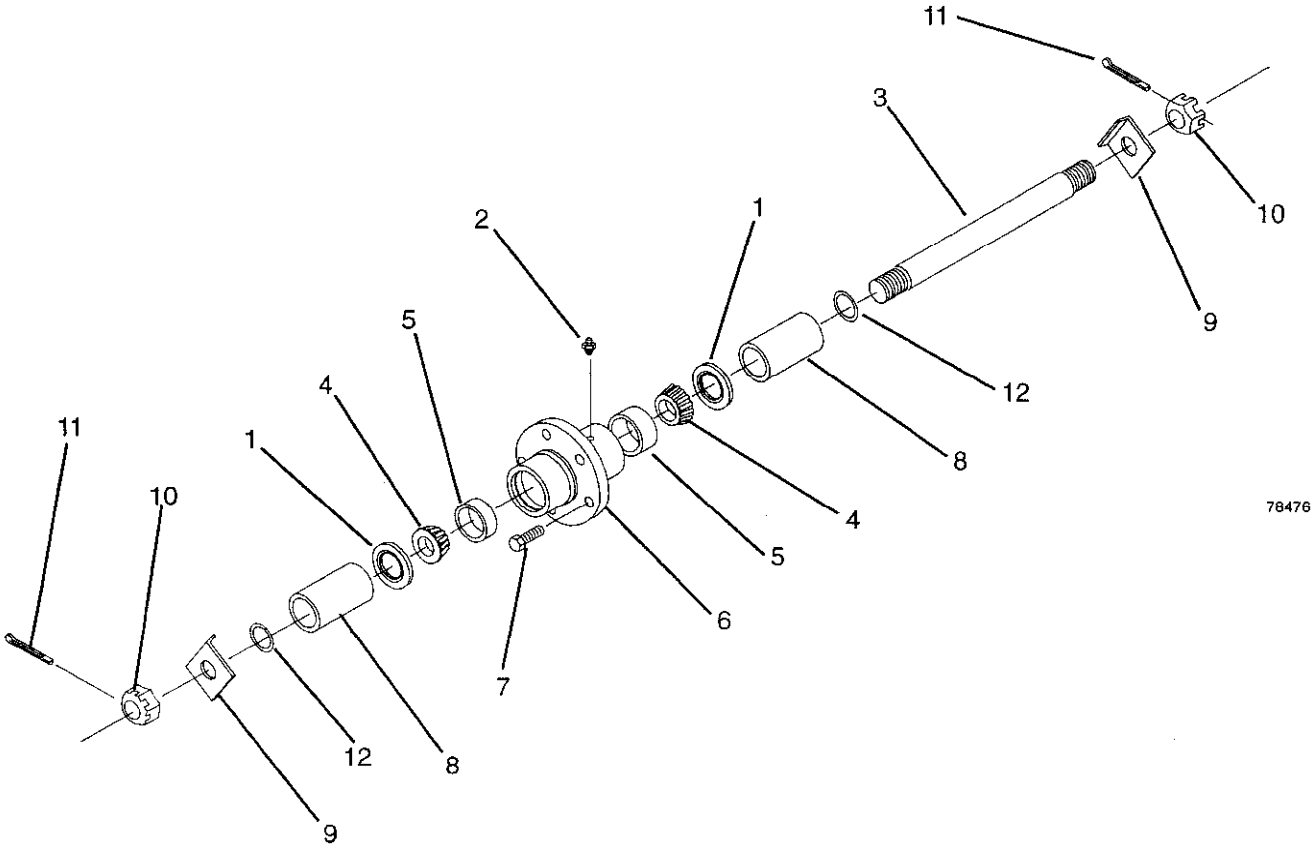

ITEM	PART NO	DESCRIPTION
1	54733	Grease Seal
2	88263	1/8NPT Grease Fitting
3	54714	1-1/2 DIAx18.5 Spindle (Serial # 441249 & Below)
	58204	1-1/2 DIAx22 Spindle (Serial # 441250 & Above)
4	54731	Bearing Cone
5	16082	Bearing Cup
6	62389	Hub w/Cups (Includes Item 5)

ITEM	PART NO	DESCRIPTION
7	47907	9/16NFx1-1/2 90 Wheel Bolt
8	54713	4" Spindle Bushing (Serial # 441249 & Below)
	62400	2ODx6 Sealed Spindle Tube (Serial # 441250 & Above)
9	55150	Spindle Lock
10	88299	1NF Slotted Nut
11	88133	3/16x2 Cotter Pin
12	12456	O-Ring (Req. w/62400)

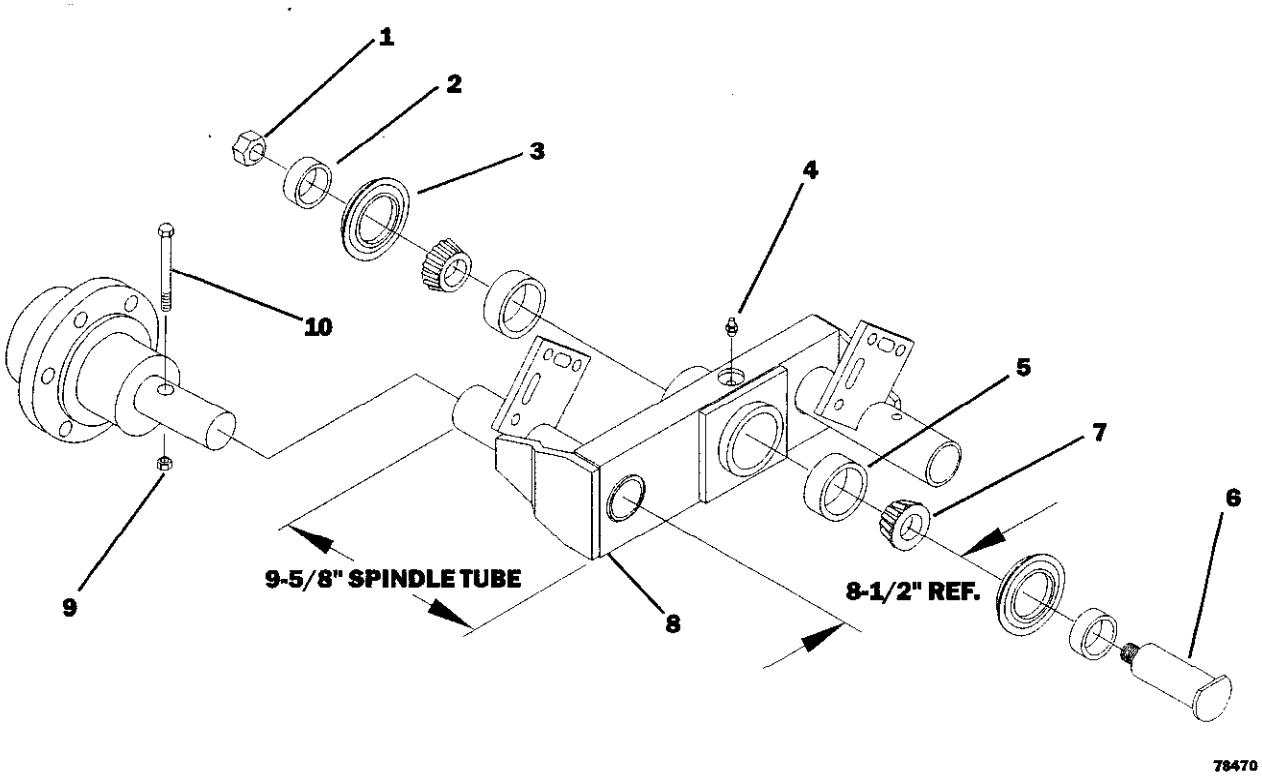

ITEM	PART NO	DESCRIPTION
1	42082	1-1/2NF Jam Nut
2	54599	Bearing Bushing 1-3/4IDx2-1/4ODx11/16 (Serial # 441249 & Below)
	62296	Walker Bearing Bushing (Serial # 441250 & Up)
3	26120	Seal
4	88528	1/8NPT Grease Fitting
5	12104	Bearing Cup
6	16277	Tandem Pin
7	12103	Bearing Cone
8	61832	Left Walker Assembly (Wing)
	61834	Right Walker Assembly (Wing)
9	88304	1/2NF Lock Nut
10	88429	1/2NFx3-1/4 GR5 Bolt

WALKING TANDEM - MAIN FRAME

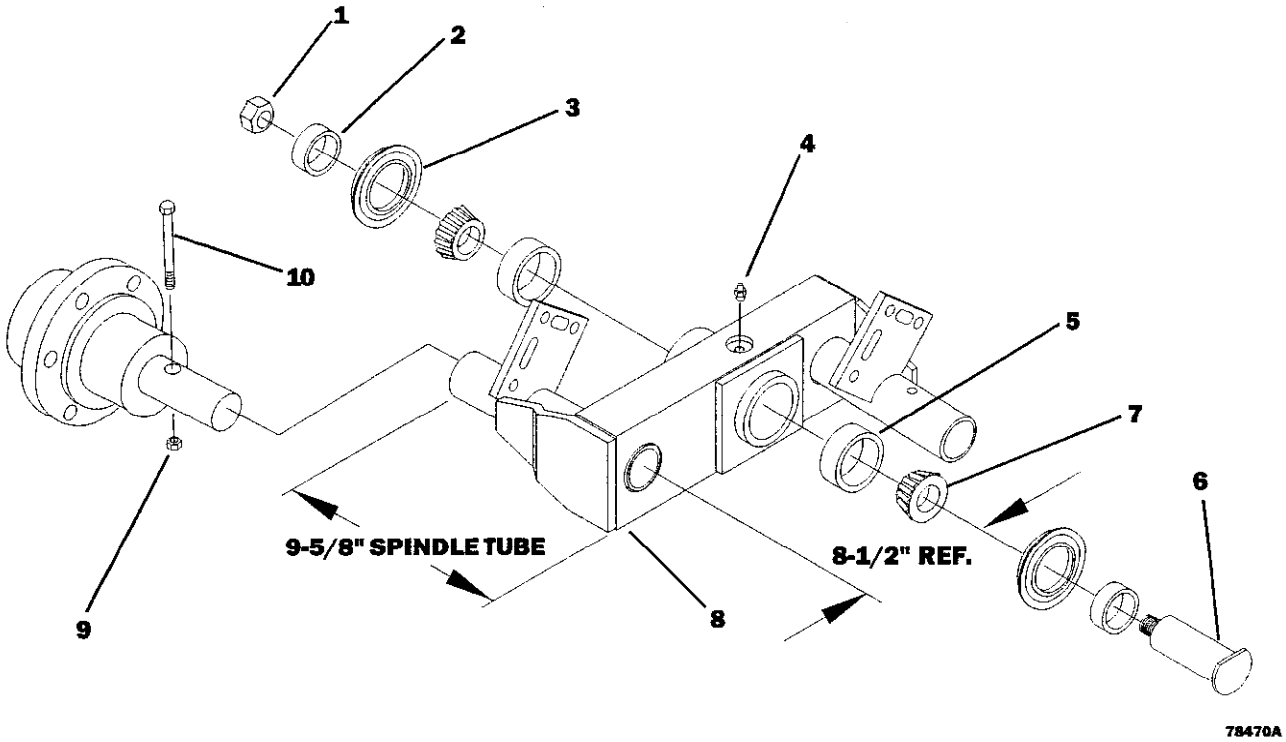

ITEM	PART NO	DESCRIPTION
1	42082	1-1/2NF Jam Nut
2	54599	Bearing Bushing 1-3/4IDx2-1/4ODx11/16 (Serial # 441249 & Below)
	62296	Walker Bearing Bushing (Serial # 441250 & Up)
3	26120	Seal
4	88528	1/8NPT Grease Fitting
5	12104	Bearing Cup
6	16277	Tandem Pin
7	12103	Bearing Cone
8	61832	HD Left Walker Assy (Main Frame)
	61834	HD Right Walker Assy (Main Frame)
9	88304	1/2NF Lock Nut
10	88429	1/2NFx3-1/4 GR5 Bolt

HD AUXILIARY HITCH

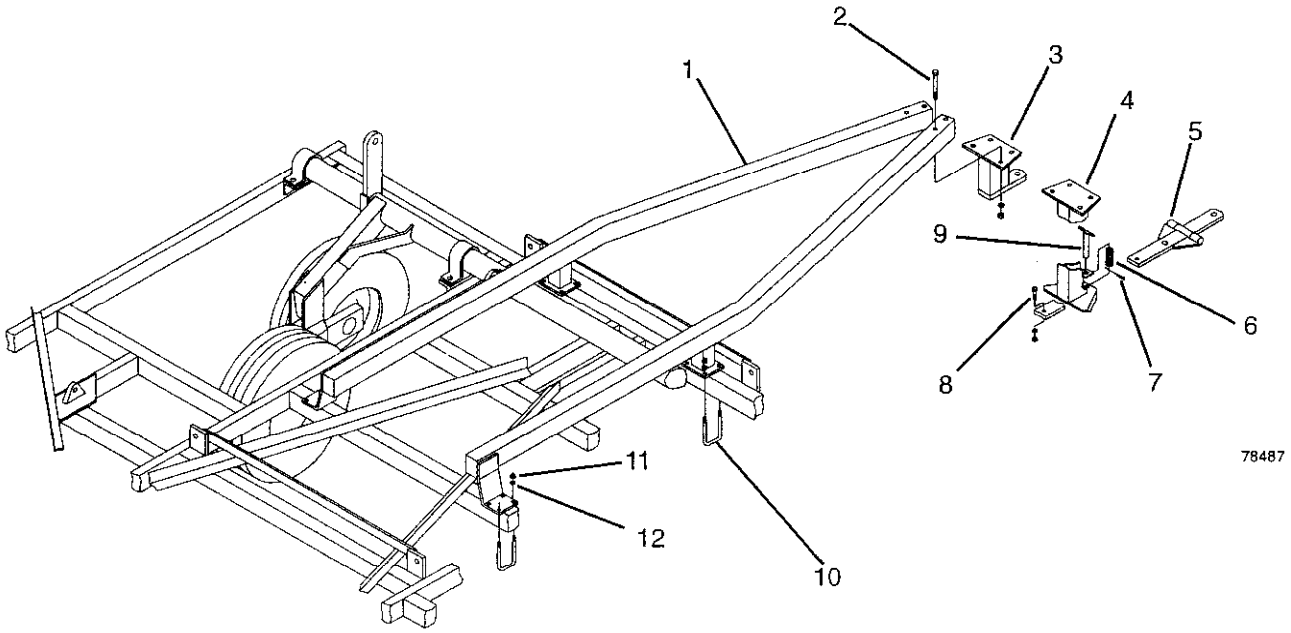

ITEM	PART NO	DESCRIPTION	ITEM	PART NO	DESCRIPTION
1	56800	HD Aux Hitch Tube Assy (Right)	7	88101	1/4x2-1/2 Cotter Pin
2	88939	3/4NCx5-1/2 GR8 Bolt	8	88294	5/8NCx2 GR5 Bolt
3	56808	Tongue Mount	9	58284	Pin Assembly
4	58281	Hitch Mount	10	88503	5/8NCx4x4-1/2 U-Bolt
5	18843	Hinged Tongue Assembly	11	88126	5/8NC Nut
6	15940	Spring	12	88129	5/8 Lock Washer

AUXILIARY HITCHES

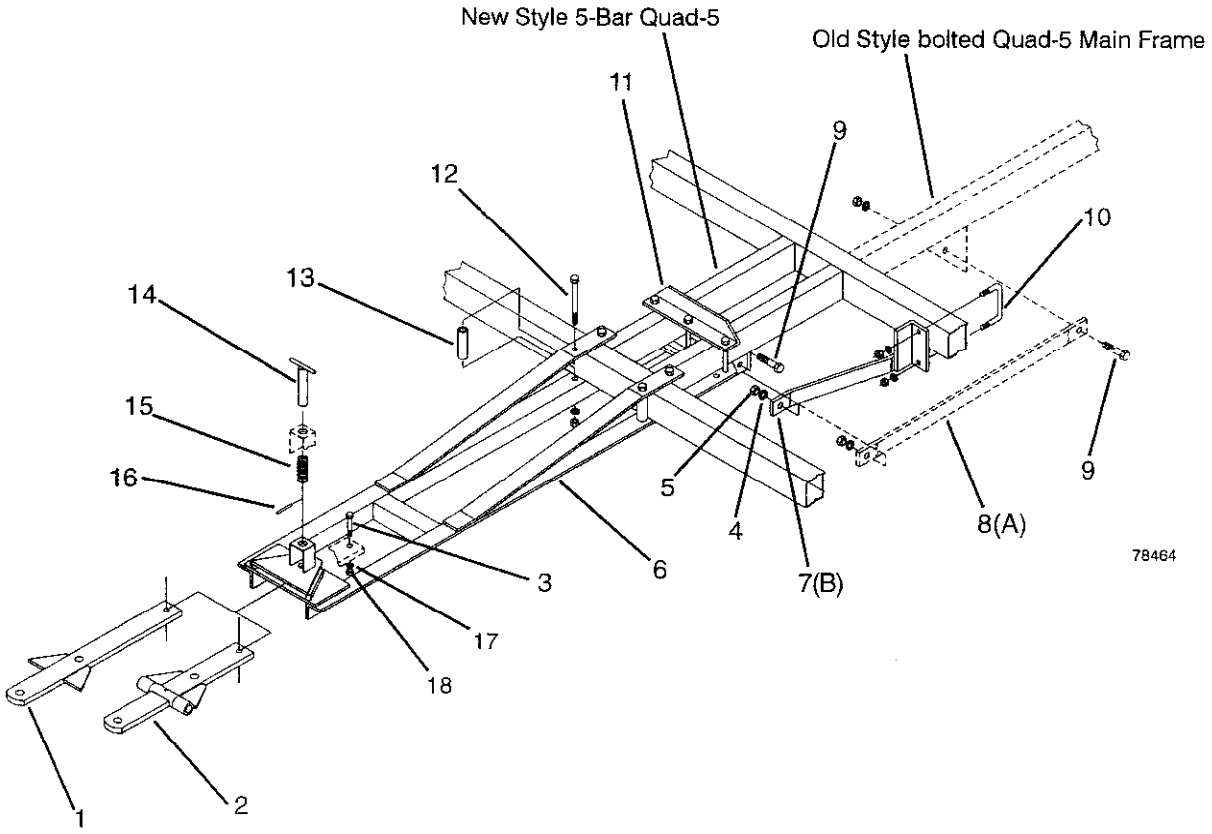

ITEM	PART NO	DESCRIPTION
	48952	(B) 3420 & 3450 Auxiliary Hitch (Solid Tongue)
	48953	(B) 3420 & 3450 Auxiliary Hitch (Hinged Tongue)
	56772	(A) Auxiliary Hitch (Straight Tongue)
	56773	(A) Auxiliary Hitch (Hinged Tongue)

(B) Indicates this part used only on Quad-5's with serial No.'s below 441249
(A) Indicates this part used only on Quad-5's with serial No.'s above 441250
Unmarked parts are used on both implements.

ITEM	PART NO	DESCRIPTION
1	15918	Straight Tongue Assembly
2	18443	Hinged Tongue Assembly
3	88294	5/8NCx2 GR5 Bolt
4	88130	3/4 Lock Washer
5	88110	3/4NC Nut
6	48943	Auxiliary Hitch Frame Assembly
7	56777	Right Pole Strap (Shown)(A)
	56778	Left Pole Strap (A)
8	48949	Pole Strap (B)
9	88290	3/4NCx2 GR8 Bolt
10	88501	5/8NCx4x4-1/2 U-Bolt
11	18436	Angle Clamp
12	88295	5/8NCx6 GR5 Bolt
13	21497	Spacer Tube
14	15922	Pin Assembly
15	15940	Spring
16	88101	1/4x2-1/2 Cotter Pin
17	88129	5/8 Lock Washer
18	88126	5/8NC Nut

GAUGE WHEEL SCRAPER

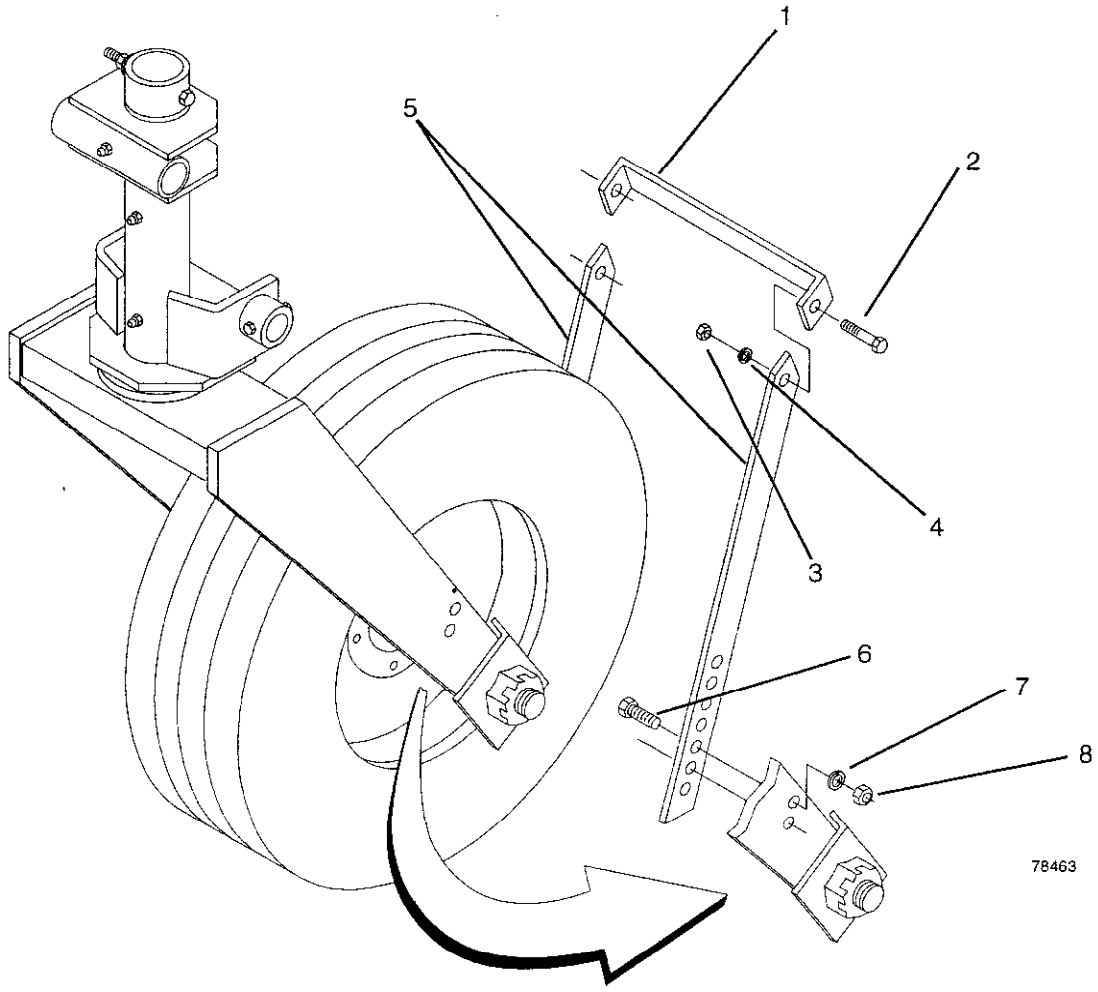

ITEM	PART NO	DESCRIPTION
1	58800	Scraper Blade - 18"
	55773	Scraper Blade - 16"
2	88475	1/2x1-1/2 GR5 Bolt
3	88104	1/2NC Nut
4	88303	1/2 Lock Washer

ITEM	PART NO	DESCRIPTION
5	40915	Scraper Bar
6	88517	1/2NCx1-3/4 GR5 Bolt
7	88303	1/2 Lock Washer
8	88104	1/2NC Nut

SCRAPERS

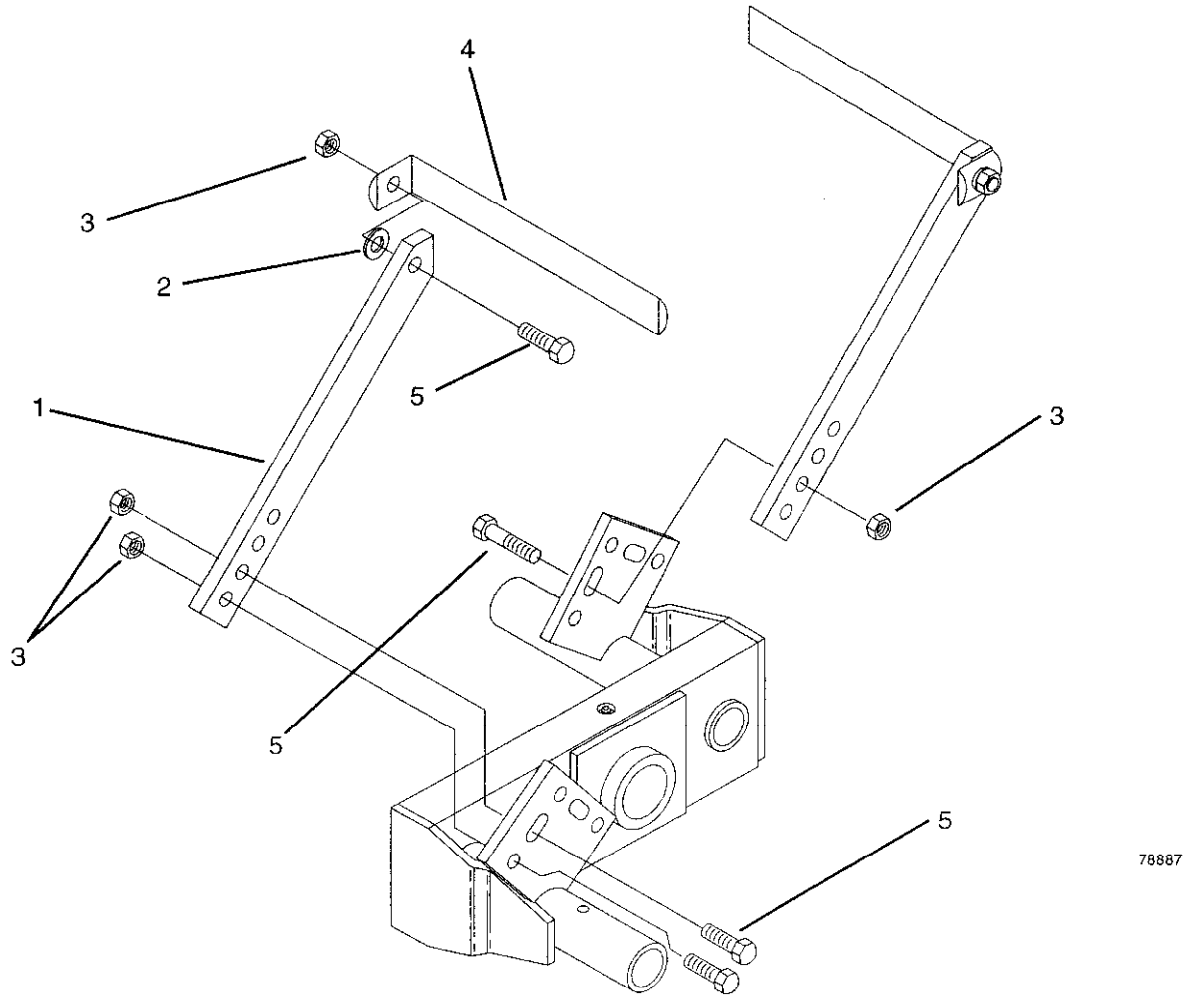

ITEM	PART NO	DESCRIPTION
1	40915	Scraper Bar
2	88277	5/8 Flat Washer
3	88845	5/8NC Top Lock Nut
4	61837	5/8DIAx13-1/2" Scraper Bar
5	88294	5/8NCx2 GR5 bolt

SINGLE POINT DEPTH CONTROL

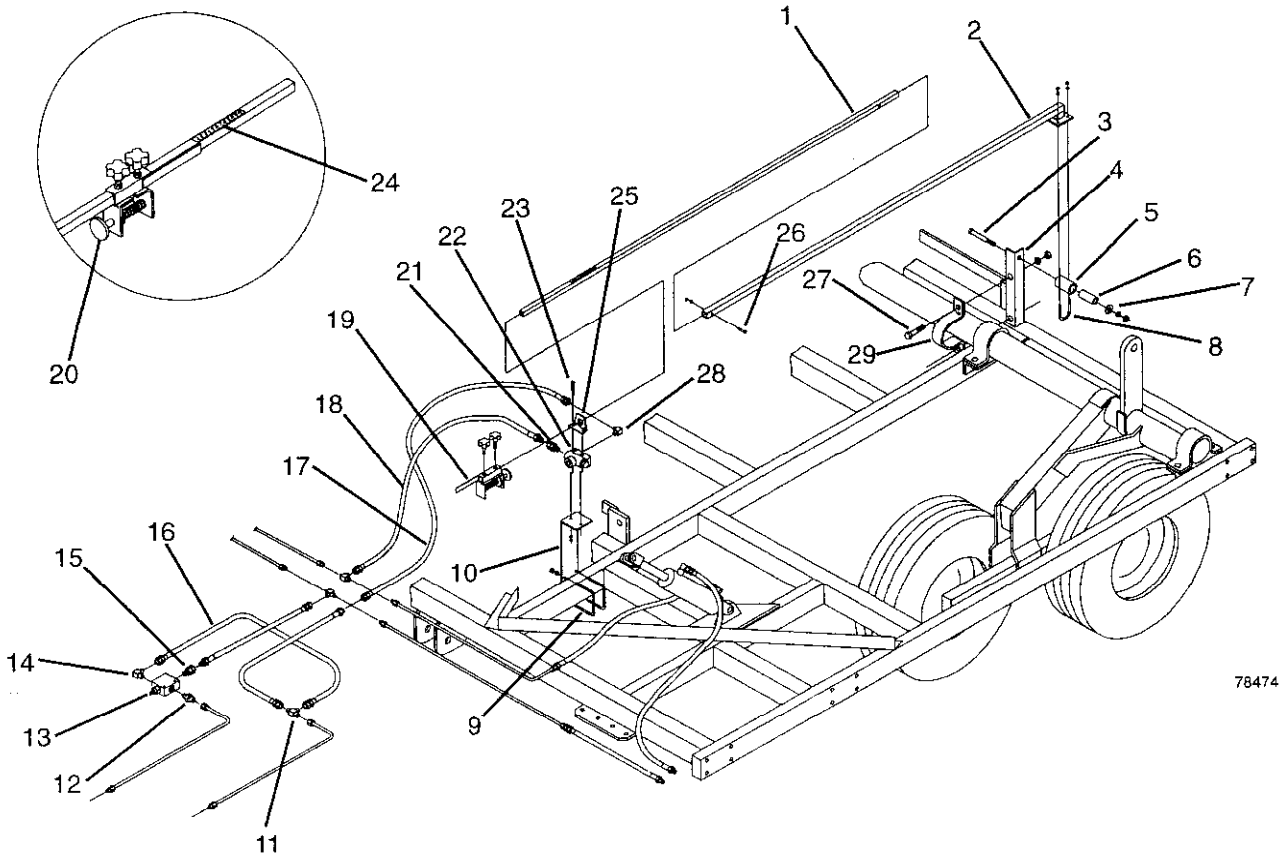

ITEM	PART NO	DESCRIPTION
1	51977	Depth Setting Tube (78")
2	51946	Anchor Tube (74")
3	88395	5/8NCx5 GR5 Bolt
4	62433	Angle
5	54821	Bushing (1-5/8ODx3-1/2)
6	54820	Bushing (1"ODx3-5/8)
7	88277	5/8 Flat Washer
8	18280	5/16NCx1-1/2 Tube Clamp
9	88515	3/8NCx4x3-3/4 U-Bolt
10	56911	Depth Control Bracket
11	13238	3/4-16NF JIC Tube Tee
12	24024	3/4JICx3/4ORB Adapter
13	62390	Pressure Reducing Valve
14	62437	3/4JICx9/16ORB Hyd Elbow
15	24004	3/4ORBx3/4JIC Adapter

ITEM	PART NO	DESCRIPTION
16	14850	3/8x18 Hyd Hose FF
17	13266	3/8x60 Hyd Hose FF
18	15515	3/8x62 Hyd Hose FF
19	62429	Bracket
20	51976	Adjustment Knob
21	51981	1/2NPTx3/4JIC Adapter
22	51975	Depth Control Valve
23	89004	5/16NCx2-1/2 GR5 Bolt
24	51978	Depth Control Decal
25	51941	Guide
26	88479	5/16NCx1-1/2 GR5 Bolt
27	88604	3/4NCx2 GR5 Bolt
28	13236	3/4Jlcx1/2NPT Elbow
29	19650	2" Axle Cap

CLEARANCE LIGHT KIT & SMV KIT

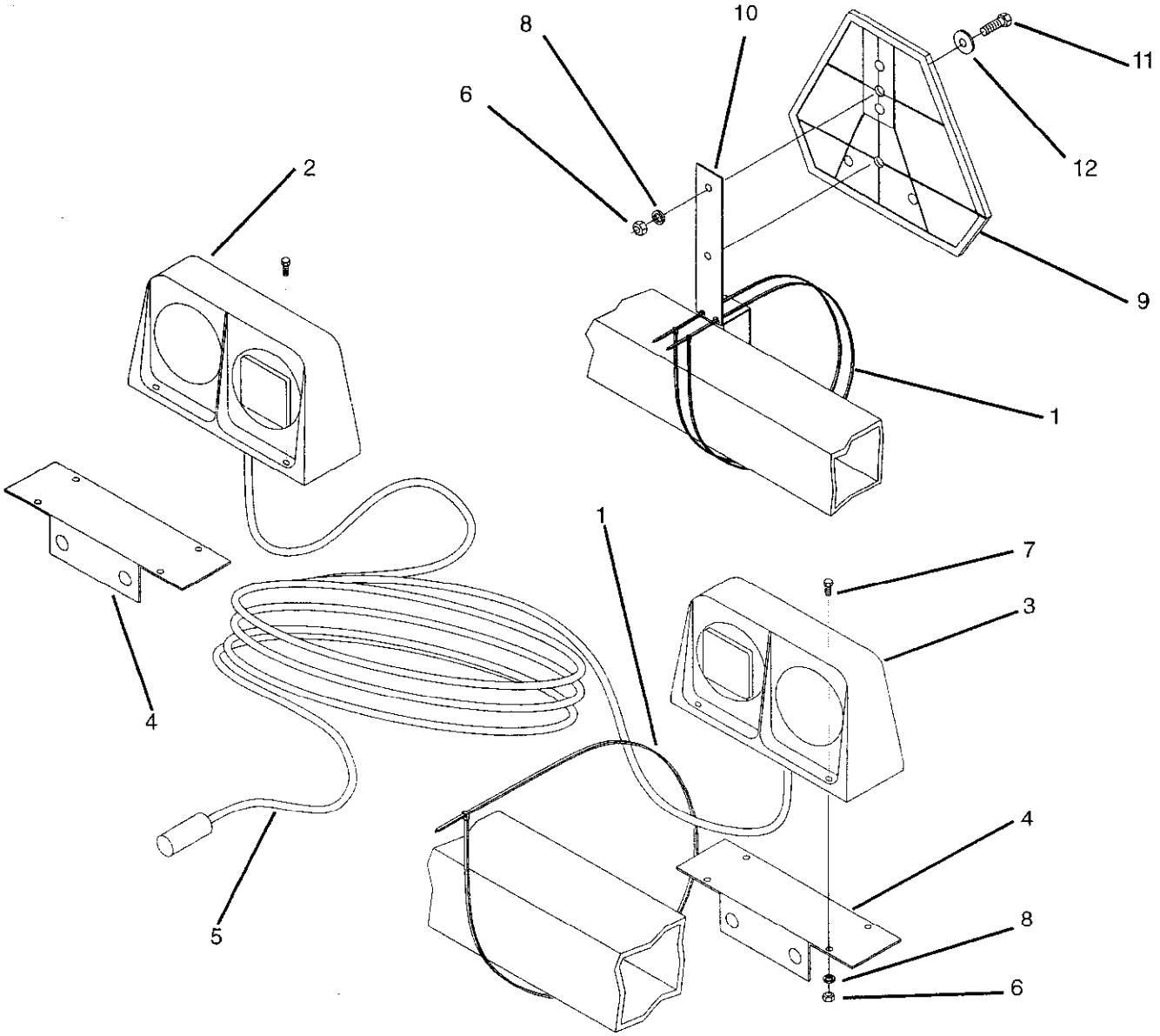

ITEM	PART NO	DESCRIPTION
	41345	SMV Kit (Includes Items 1, 6, 8-12)
1	33906	Tie Wrap
2	64595	LH Dual Lamp
3	64596	RH Dual Lamp
4	64660	Light Mount Plate
5	64661	Row Crop Flat Wire Harness
6	88172	1/4NC Nut
7	88203	1/4NCx1 Bolt
8	88262	1/4 Lock Washer
9	30651	SMV Emblem
10	41359	SMV Bracket
11	88203	1/4NCx1 Bolt
12	88261	1/4 Flat Washer

DECALS

1

WIL-RICH®

2

3

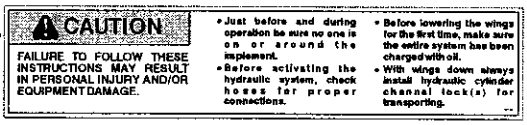

4

CAUTION

TO AVOID INJURY AND/OR EQUIPMENT DAMAGE:

- This cylinder has an integral restricting orifice and must be replaced with an identical cylinder.

20121

6

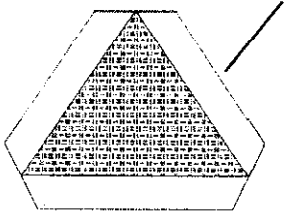

7

BY-PASS THIS END

8

ADJUST SCREW STOPS EVENLY

5

WIL-RICH QUAD5

9

CAUTION

FAILURE TO FOLLOW THESE INSTRUCTIONS MAY RESULT IN PERSONAL INJURY AND/OR

- Just before and during operation be sure no one is on or around the
- Before activating the hydraulic system, check hoses for proper
- Before lowering the wings for the first time, make sure the entire system has been
- With wings down always install hydraulic cylinder channel lock(s) for

53334

10

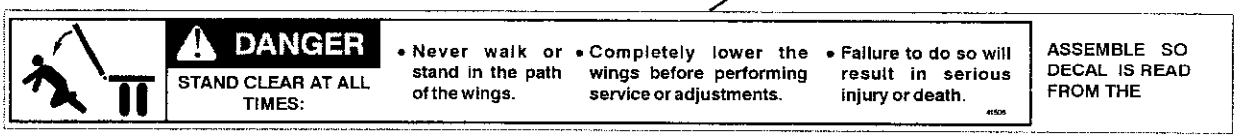

11 12 13 14

11	12	13	14
WINGS UP	WINGS DOWN	MAIN UP	MAIN DOWN
WINGS UP	WINGS DOWN	MAIN UP	MAIN DOWN
WINGS UP	WINGS DOWN	MAIN UP	MAIN DOWN
WINGS UP	WINGS DOWN	MAIN UP	MAIN DOWN
WINGS UP	WINGS DOWN	MAIN UP	MAIN DOWN
WINGS UP	WINGS DOWN	MAIN UP	MAIN DOWN

15 16

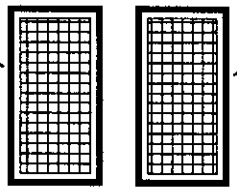

ITEM	PART NO	DESCRIPTION
	74156	Q5 Operators
	74157	Q5 Assembly Instructions
	74169	5Bar Q5 Operators Manual
	74170	5Bar Q5 Assembly Instructions
1		Wil-Rich Decals
	64402	3/4x5 WR Decal
	64403	1-1/8x7-3/8 WR Decal
	64404	1-3/4x11-5/8 WR Decal
2	49163	Danger Decal
3	49165	Caution Decal
4	20121	Integral Restrictor Decal
5	54899	Quad-5 Decal Kit

ITEM	PART NO	DESCRIPTION
6	41345	SMV Kit
7	20339	Bypass Decal
8	20119	Screw Stop Adjustment Decal
9	53334	Caution Decal
10	41508	Wing Lock Danger Decal
11	54900	Wings Up Decal
12	54901	Wings Down Decal
13	54902	Main Up Decal
14	54903	Main Down Decal
15	22372	Amber Reflector
16	22371	Red Reflector

Index

Symbols

10176 Shim 3, 4, 5, 6, 7, 14, 15, 16, 17, 18, 19
10236 15x6 Wheel Rim 22, 23
10344 Outer Bearing Cup 60, 61
10345 Outer Bearing Cone 60, 61
10399 Axle Cap 3, 4, 5, 6, 7, 14, 15, 16, 17, 18, 19
10498 15x8 Wheel Rim ..... 3, 4, 5, 6, 7, 9, ... 14, 15, 16, 17, 18 26, 27, 28, 29
11364 Clevis Hitch 8, 9, 10
11378 Inner Bearig Cone 60
11379 Inner Bearing Cup 60
11381 Dust Cap 60, 61
11397 Spring Handle 56, 57, 58
11398 Spring Plug 56, 57, 58
11509 Shank Holder Assembly 56
11510 Spring 56, 57, 58
11511 FC Shank 56
11540 Spring Plug Assembly 56, 57, 58
11638 1-1/4NCx6-1/2 GR5 Hitch Bolt 8, 9, 10
11952 2" Reversible Spike 59
12103 Bearing Cone 63, 64
12104 Bearing Cup 63, 64
12282 Cylinder Piston 55
12286 4" Cylinder Snap Ring 52, 53, 55
12293 3-1/2 Cylinder Snap Ring 54
12299 Cylinder Piston 54
12302 Cylinder Rod Assembly 54
12376 Bushing (.781IDx1-1/4ODx.625) 4, 5, 6, 7
12456 O-Ring 62
12724 Hose Bracket 10
13142 95Lx15 Wheel Assembly 22, 23
13215 Tube Clamp 3, 4, 6, 8, 9, 14, 16, 18
13234 3/4JICx1/2NPT Coupler Adapter 33, 34, 35, 36, 37, 38, 39, 41, 42, 43, 44, 45, 47, 48, 49, 50, 51
13234 Adapter 40
13235 3/4JICx3/8NPT Port Elbow . 33, 34, 35, 36, 37, 38, 39, 40, 41, 42, 43, 44, 45
13236 3/4JICx1/2NPT Port Elbow . 47, 48, 49, 50, 51, 69
13237 3/8 Cylinder Port Tee 40, 41, 42, 44
13238 3/4JIC Tube Tee 33, 34, 35, 36, 37, 38, 39, 43, 45, 46, 47, 48, 49, 50, 51, 69
13239 3/4JIC Hose Union 34, 35, 37, 38, 39, 41, 42, 43, 44, 45, 47, 49, 50, 51
13239 3/4JIC Union 48
13254 1/2x80 Hyd Tube 38, 44, 50
13255 1/2x110 Hyd Tube 33, 36, 40, 47
13258 1/2x60+2 Hyd Tube 34, 37, 38, 41, 42, 44, 47, 48, 50
13259 3/8x18 Hose 50
13259 3/8x18 Hose MF 43, 48
13260 3/8x24 Hose MF 45
13261 3/8x30 Hose FF 35, 36, 39, 43
13262 3/8x30 Hose MF 42, 44, 47, 48, 50
13263 3/8x36 Hose MF 43, 47, 48, 49, 50, 51
13264 3/8x48 Hose MF 34, 37, 38, 41, 42, 43, 44, 45, 48, 49, 50
13265 3/8x56 Hose FF 38, 44, 49, 51
13266 3/8x60 Hose MF 39, 43, 47, 69
13267 3/8x72 Hose MF 33, 34, 36, 37, 38, 40, 41, 42, 44, 47, 48, 49, 50
13268 3/8x78 Hose FF 38, 39, 44, 45, 51
13269 3/8x84 Hose MF 39, 45, 47
13270 Pole Tube Bracket .. 3, 4, 6, 8, 14, 16, 18
13287 1/2x38 Hyd Tube 47, 48
13482 3/8x108 Hose FF ... 35, 39, 43, 45, 49, 51
13483 3/8x120 Hose FF 40, 41, 42, 43, 44, 51
13484 3/8x156 Hose FF 40, 41, 42, 43, 45
13569 4x8 Cylinder Rod 52
13570 Stop Collar Screw Stop 52, 53
13580 3/8x96 Hose MF 33
13681 1-1/2" Cylinder Lock Channel ..... 47, 48, ... 49, 50,51
13851 Stop Plate 4x8 ..... 52, 53
14131 2" Hub & Spindle Assembly 61
14248 Inner Bearig Cone 61
14249 Inner Bearing Cup 61
14251 2" Spindle 61
14537 Seal Kit 52
14644 3/8x36 Hose FF 37, 41, 42
14685 HK 7/16x1-1/2 FC Shovel Kit 59
14822 Cylinder Yoke 52, 53
14824 Piston Lock Nut 52, 53, 54, 55
14850 3/8x18 Hose FF 43, 45, 47, 69
14851 3/8x42 Hose FF 34, 37, 39, 40, 41, 42, 45
14905 Seal Kit 54
14906 Seal Kit 52, 53
14907 Seal Kit 55
15113 1-1/2 Stop Collar . 47, 48, 49, 50, 51, 52, 53
15221 9" Dura-Crown Shovel (924) 59
15485 Top Adjustment Assembly 22, 23
15515 3/8x62 Hose FF 35, 36, 39, 43, 45, 49, 51, 69
15543 Base Plate 3, 14, 16, 18
15579 Shank Carriage Bolt 56, 57
15699 1/2x86 Hyd Tube 50
15811 1/2x65 Hyd Tube 47, 48
15910 1/2x110 Hyd Tube ..... 36, 37, 38, ... 40, 41, 42, 43, 44, 45
15918 Straight Tongue Assembly 66
15922 Pin Assembly 66
15940 Spring 65, 66
15995 3/8x24 Hose MF 35
16009 Collar 26, 27
16082 Bearing Cup 62
16094 7/8 Spindle Washer 60, 61
16221 4x9.3 Cylinder Rod 53
16277 Tandem Pin 63, 64
16287 95Lx15 Tubeless Tire 22, 23, 26, 27, 28, 29

16287 95lX15 Tubeless Tire ..... 3, 4, 5, 6, 7, ... 14, 15, 16, 17, 18, 19
16290 95Lx15 Wheel Assembly ..... 3, 4, 5, 6, 7, ... 14, 15, 16, 17, 18, 19, 26, 27, 28, 29
16339 FC Shovel Extension Kit 59
18214 1-1/4NCx6-1/2 GR5 Hitch Bolt 10
18236 Dual Cast Hitch 8, 9, 10
18237 Cast Hitch 8, 9, 10
18280 5/16NCx1-1/2 Tube Clamp 69
18436 Angle Clamp 66
18443 Hinged Tongue Assembly 66
18843 Hinged Tongue Assembly 65
19650 2" Axle Cap 69
19802 7" High Crown Shovel 59
19803 9" High Crown Shovel 59
20119 Screw Stop Adjustment Decal 71
20121 Integral Restrictor Decal 71
20339 Bypass Decal 71
20464 1/2x48+2 Hyd Tube 48, 50
20465 1/2x48 Hyd Tube 34, 37, 41, 42, 48, 50
20569 Shank to Frame Bracket 56
20570 FC Shank Assembly (4") 56
20637 1/2NFx3 GR5 Bolt 56, 57
20961 4x30 Cylinder Tube Assembly 55
20963 4x30 Cylinder Rod Assembly 55
21037 1/2x72 Hyd Tube 48, 50
21488 7" Low Crown Shovel (924) 59
21489 9" Low Crown Shovel (924) 59
21490 10" Low Crown Shovel (924) 59
21491 12" Low Crown Shovel (924) 59
21492 10" High Crown FC Shovel 59
21493 12" High Crown FC Shovel 59
21497 Spacer Tube 66
21535 FC Shank 57, 58
22047 Twin Spring Bracket 58
22051 Shank Holder Assembly 58
22371 Red Reflector 12, 71
22372 Amber Reflector 12, 71
22463 3/4NC Lock Nut 58
22463 3/4NF Lock Nut 56
22933 3/4NFx4-1/2 GR5 Bolt 58
23030 Hairpin Cotter 2.69" 7, 10
23153 1/2NCx2 GR5 Bolt 56, 57, 58
24024 3/4JICx3/4ORB Adapter 43, 45, 46, 69
24097 2" Pressed Hub 61
24182 3/8x84 Hose MF 36, 40, 44
24415 Jack 8, 9, 10
24459 Safety Chain 8, 9, 10
24569 3/8x80 Hose FF 33
25580 3/4JICx3/4ORB Elbow 46
25585 Triple Lip Seal (1.62ID) 60
25586 Wear Sleeve 60
25591 3/4JICx3/4JIC Swivel 46
25595 3/8x26 Hose FF 36, 40
25596 3/8x32 Hose FF 33
25602 3/8x65 Hose FF 33, 37, 40, 41, 42
25603 3/8x75 Hose FF 34, 36, 37, 40, 41, 42, 44
26120 Seal 63, 64
26121 Wear Sleeve & Seal Kit 60
26774 Gauge Wheel Leg 22, 23
26815 8" Saddle Stub 14, 15, 16, 17, 18, 19, 20, 21, 22, 23, 25
26817 Backing Plate 14, 15, 16, 17, 18, 19, 20, 21, 22, 23, 25
27050 Shank Holder Assembly 57
30405 6 Bolt Hub w/cups 60
30651 SMV Emblem 30, 31, 70
30784 Valve Stem ..... 22, 23, 3, 5, 6, 7, 14, 16, ... 4, 15, 17, 18, 19, 26, 27, 28, 29
33096 Nylon Tie Wrap 30, 31
33906 Tie Wrap 70
40915 Scraper Bar 67, 68
41232 1-3/4 Spindle 60
41233 1-3/4 Hub & Spindle 22, 23, 60
41345 SMV Kit 30, 31, 70, 71
41359 SMV Bracket 30, 31, 70
41452 Centering Washer 58
41508 Wing Lock Danger Decal 71
41575 FC Shovel Extension 59
41638 4" Sweep (41) S-Shank 59
41639 7" Sweep (41) S-Shank 59
41640 9" Sweep (41) S-Shank 59
41891 Hi-Torque Spring Bracket 57
41892 Hi-Torque FC Shank Assy 57
42082 1-1/2NF Jam Nut 63, 64
42471 1/4x5 Spring Lock Pin 49
42472 Cylinder Pin 54
42473 Cylinder Pin 55
42480 4x9.3 Top Bypass Cylinder 49
42484 Cylinder Lock Pin 4, 5, 6, 7, 14, 15, 17, 18, 52, 53, 54, 55
42484 Cylinder Lock Pin 29
42573 4x8 Cylinder Tube Assy TBP 52
42574 4x9.3 Cylinder Tube Assy TBP 53
42576 End Gland 52, 53, 55
42577 Piston 52, 53
42579 4x8 Top Bypass Cylinder 47, 48, 49, 50, 51, 52
42580 4x9.3 Top Bypass Cylinder 6, 7, 47, 48, 49, 50, 51, 53
42664 Seal Kit 52, 53
42721 1/4x5 Spring Lock Pin 47, 48, 50, 51
46714 15x10 Wheel Rim 4
47907 9/16NFx1-1/2 90 Wheel Bolt 62
47926 Cone Base Nylon Lock Nut 57
48512 3411 Wing Rest 31
48514 3450 Wing Rest 31
48518 Left Wing Lift Assembly 15, 17
48519 Right Wing Lift Assembly 15, 17
48520 Left Wing Lift Assembly 19
48521 Right Wing Lift Assembly 19
48522 Wing Lift Link 14, 24
48523 Wing Lift Bushing 24
48536 20" Saddle Stub 25
48537 Wing Hinge 14, 15, 16, 17, 18, 19
48943 Auxiliary Hitch Frame Assembly 66
48949 Pole Strap 66
48952 (B) 3420 & 3450 Auxiliary Hitch 66
48953 (B) 3420 & 3450 Auxiliary Hitch 66
49024 2Ft Rigid Stub 13

49025 12" Saddle Stub 14, 15, 16, 17, 18, 19, 22, 25
49163 Danger Decal 71
49165 Caution Decal 71
51207 3-1/2 Cylinder Gland 54
51211 Seal Kit 54
51212 Seal Kit 55
51219 4x30 Cylinder 33
51229 4x30 Cylinder 3, 4, 6, 55
5, 34, 35, 36, 37, 38, 39, 40, 41, 42, 43, 44, 45
51235 3-1/2x24 Cylinder 40, 41, 42, 43, 44, 45, 54
51454 Right 3' 5Bar Q5 Wing 21
51455 Left 3' 5Bar Q5 Wing 21
51456 Hinge Link 20, 21
51459 Right Anchor 21, 23
51460 Left Anchor 21, 23
51461 Right Rear Hinge 20, 21, 22, 23
51462 Left Rear Hinge 20, 21, 22, 23
51465 Lift Linkage 20, 21, 22, 23
51466 Right 5' 5Bar Q5 Wing 23
51467 Left 5' 5Bar Q5 Wing 23
51468 Bushing (.782IDx1"ODx1.06) 20, 21, 22, 23
51469 Shim (16Ga x 2-1/4x 4) 20, 21, 22, 23
51472 Lift Linkage 22, 23
51655 Sequence Valve 43, 45, 46
51656 Outer Wing Rest 23
51931 Wing Spacer 21, 23
51941 Guide 69
51946 Anchor Tube (74") 69
51975 Depth Control Valve 69
51976 Adjustment Rod 69
51977 Depth Setting Tube (78") 69
51978 Depth Control Decal 69
51981 1/2NPTx3/4JIC Adapter 69
53098 Ouer Wing Rest 21
53334 Caution Decal 71
53405 Edge Formed FC Shank Assy 56
53406 Hi-Torqu Edge Formed FC ..... Shank Assy 57
53408 Edge Formed FC Shank 56, 57
54516 13FT Main Stub 5
54538 Center Pull Rod 5
54540 3/8x89 Hose FF 38
54556 Lower Gauge Arm 27
54557 Lower Link Arm 29
54559 Top Link Arm (8") 26, 27
54563 Gauge Wheel Mast 27, 29
54571 Gauge Wheel Pivot 26, 27, 28, 29
54586 Center Axle 4, 5
54589 7' Floating Wing Stub 15
54592 Right Q5 Main Axle Assembly 5
54593 Left Q5 Main Axle Assembly 5
54595 Pivot Pin 26, 27, 28, 29
54597 Left Wing Axle Assembly w/Walker 15, 17, 19
54598 Right 5Bar Q5 Wing Axle w/o Walker 15, 17, 19
54599 Bearing Bushing 1-3/4IDx2-1/4ODx11/16 ..... 63, 64
54621 Adjust Rod 14, 15, 16, 17, 18, 19
54683 Mast Support Right 27, 29
54684 Mast Support Left 29
54689 Tube Pin 4, 5, 6, 7, 14, 15, 16, 17, 18, 19
54713 4" Spindle Bushing 62
54714 1-1/2 DIAx18.5 Spindle 62
54731 Bearing Cone 62
54733 Grease Seal 62
54734 Yoke (14" Width) 27, 29
54796 Center Adjust Tube 5, 7
54798 Left Wing Adjust Tube 15, 17, 19
54800 Clevis Adjust Rod 4, 5, 6, 7, 14, 15, 16, 17, 18, 19
54809 Top Link Arm (8") 28, 29
54820 Bushing (1"ODx3-5/8) 69
54821 Bushing (1-5/8ODx3-1/2) 69
54827 Spring Pin 29
54834 4-1/2" Compression Spring 28, 29
54899 Quad-5 Decal Kit 71
54900 Wing Up Decal 33, 34, 35, 36, 37, 38, 39, 40, 41, 42, 43, 44, 45, 71
54901 Wing Down Decal 33, 34, 35, 36, 37, 38, 39, 40, 41, 42, 43, 44, 45, 71
54902 Main Up Decal 47, 48, 49, 50, 51, 71
54903 Main Down Decal 47, 48, 49, 50, 51, 71
54985 11'8" Floating Wing Stub 19
54986 16Ft. Main Frame Stub 7
54988 16' Floating Hitch Pole 10
54995 Center Axle 6, 7
55036 Front Wing Rest 31
55150 Spindle Lock 62
55151 Collar 28, 29
55152 3/4x4 Pin 28, 29
55282 Rifgt Front Hinge 21
55282 Right Front Hinge 23
55283 Left Front Hinge 21, 23
55655 HD Edge Formed Shank 58
55658 Twin Spring Edge Formed FC 58
55659 Gauge Wheel Mast 26, 28
55674 13' Floating Hitch (130" Long) 9
55675 16' Floating Hitch (164" Long) 9
55697 3-1/2x24 Cylinder Tube Assembly 54
55714 Right 3' 5Bar Q5 Wing 20
55715 Left 3' 5Bar Q5 Wing 20
55717 Right 3' 5Bar Q5 Wing 22
55718 Left 3' 5Bar Q5 Wing 22
55740 Right Wing Adjust Tube 14, 16, 18
55741 Left Wing Adjust Tube 14, 16, 18
55749 Center Adjust Tube 4, 6
55758 Wing Rest 20, 22
55769 5Bar Q5 Single Wing Rest 31
55772 Front Hinge 20, 22
55773 Scraper Blade - ..... 16" 67
55838 Hose Bracket 8, 9
56222 2Ft. Rigid Wing 12
56534 3/4ICx3/4ORBx3/4JIC Tee 46
56535 Manifold Block 46
56536 Manifold Block Mount 3, 4, 6, 46
56537 1/2x5-1/8 U-Hyd Tube 46
56538 1/2x3-1/4 U-Hyd Tube 46
56539 3/8x50 Hose FF 36, 38, 40, 44

56540 3/8x89 Hose FF 44
56772 (A) Auxiliary Hitch 66
56773 (A) Auxiliary Hitch 66
56777 Right Pole Strap 66
56778 Left Pole Strap 66
56800 HD Aux Hitch Tube Assy 65
56808 Tongue Mount 65
56876 Right 5Bar Q5 Wing Axle w/o Walker 14, 16, 18
56877 Left 5BAr Q5 Wing Axle w/o Walker 14, 16, 18
56886 Left 5BAr Q5 Wing Axle w/o Walker 15, 17,19
56887 Right Wing Axle Assembly w/Walker 15, 17, 19
56888 Right Q5 Main Axle 5, 7
56889 Left Q5 Main Axle 5, 7
56911 Depth Control Bracket 69
56996 13' 5Bar Q5 Main Frame 4
56997 16' 5Bar Q5 Main Frame 6
56998 Right 7' 5Bar Q5 Wing 14, 15
56999 Left 7' 5Bar Q5 Wing 14, 15
57906 31x13.50 8 Ply Tire assy 4
57907 31x13.50 8 Ply Tire 4
57908 Valve Assembly 4
57918 Right 9'4" 5Bar Q5 Wing 16
57919 Left 9'4" 5Bar Q5 Wing 16
57920 Right 9'4" 5Bar Q5 Wing 18
57921 Left 9'4" 5Bar Q5 Wing 18
57980 Right 9'4" 5Bar Q5 Wing 19
57981 Left 9'4" 5Bar Q5 Wing 19
58203 Yoke (18") 26, 28
58204 1-1/2 DIAx22 Spindle 62
58281 Hitch Mount 65
58284 Pin Assembly 65
58546 Grease Seal 61
58800 Scraper Blade - 18" 67
61236 13' 5Bar Q5 Wing Rest 31
61237 16' 5Bar Q5 Wing Rest 31
61377 Left HD 5BQ5 Main Axle (Red) 4, 6
61378 Right HD 5BQ5 Main Axle (Red) 4, 6
61384 Lower Link Arm 28
61385 Left 8" Lower Link Arm 26
61386 Right 8" Lower Link Arm 26
61744 Left Wing Lift Assembly 14, 16
61745 Right Wing Lift Assembly 14, 16
61746 Left Wing Lift Assembly 18
61747 Right Wing Lift Assembly 18
61832 HD Left Walker Assy 64
61834 HD Right Walker Assy 64
61837 5/8DIAx13-1/2" Scraper Bar 68
61839 Left Walker Assembly 63
61841 Right Walker Assembly 63
61842 Right Main Axle w/Walker 7
61842 Right Wing Axle Assembly w/Walker 7, 14, 16, 18
61843 Left Wing Axle Assembly w/Walker 7, 14, 16, 18
61844 Left HD 5BQ5 Main Axle Assy 4, 6
61845 Right HD 5BQ5 Main Axle Assy 4, 6
62296 Walker Bearing Bushing 63, 64
62389 Hub w/Cups 62
62390 Pressure Reducing Valve 69
62400 2ODx6 Sealed Spindle Tube 62
62404 Cylibder Pin 52, 53
62429 Bracket 69
62433 Angle 69
62437 3/4JICx9/16ORB Hyd Elbow 69
62804 Pin Guide 28
62805 Spring Pin 28
64019 Gauge Arm Trunion 5
64402 3/4x5 WR Decal 71
64403 1-1/8x7-3/8 WR Decal 71
64404 1-3/4x11-5/8 WR Decal 71
64595 LH Dual Lamp 70
64596 RH Dual Lamp 70
64660 Light Mount Plate 70
64661 Row Crop Flat Wire Harness 70
66277 11' 5BQ5 Main Frame 3
66294 Tube 3
66309 11' 5BQ5 Main Hitch 8
66310 Center Adjust Rod 3
66313 11 5BQ5 Main Axle 3
66314 11' Wing Rest 30
66315 11 5BQ5 Main Adjust Tube 3
66965 13' HD 5BQ5 Main Axle (Red) 6
66970 13' HD 5BQ5 Main Axle (Red) 4
88101 1/4x2-1/2 Cotter Pin 65, 66
88103 3/8NC Nut 46
88104 1/2NC Nut 25, 67
88110 3/4NC Nut 66
88126 5/8NC Nut 56, 57, 58, 65, 66
88129 5/8 Lock Washer 56, 57, 58, 65, 66
88129 5/8NC Lock Washer 56, 57, 58
88130 3/4 Lock Washer 66
88131 3/4 Flat Washer 4, 5, 6, 7, 20, 21, 22
88133 3/16x2 Cotter Pin 8, 9, 10, 62
88142 1/2NFx1 90 Wheel Bolt 22, 60, 61
88152 7/16 Flat Washer 59
88172 1/4NC Nut 70
88190 1/4NCx1/2 Bolt 54
88196 1" Flat Washer 24
88203 1/4NCx1 Bolt 70
88261 1/4 Flat Washer 70
88262 1/4 Lock Washer 70
88263 1/8NPT Grease Fitting 4, 5, 6, 7, 14, 15, 16, 18, 19, 60, 61, 62
88264 1NCx6 GR5 Bolt 20, 21, 23
88272 3/4NCx4 GR5 Bolt 26, 27
88277 5/8 Flat Washer 68, 69
88278 5/16 Flat Washer 55
88290 3/4NCx2 GR8 Bolt 5, 7, 15, 17, 19, 66
88291 3/4NCx3 GR5 Bolt 20, 21, 22
88292 5/8NCx3-1/2 GR5 Bolt 12, 13,14, 15, 16, 17, 18, 19, 20, 21, 22, 23
88293 3/4NCx6 GR5 Bolt . 14, 15, 16, 18, 26, 28
88294 5/8NCx2 GR5 Bolt .. 56, 57, 58, 65, 66, 68
88295 5/8NCx6 GR5 Bolt 5, 7, 27, 29, 66
88298 5/8NCx4 GR5 Bolt 12, 14, 16, 18, 20, 22, 31
88299 1NF Slotted Nut 62
88301 3/16x1-1/2 Cotter Pin 60, 61

88303 1/2 Lock Washer 25, 67
88304 1/2NF Lock Nut .....
..... 22, 23, 56, 57, 60, 61, 63, 64
88311 5/8NCx2-1/2x3-3/4 U-Bolt 22, 23
88312 1NCx5 GR5 Bolt 20, 21, 22, 23, 24
88313 1/2NFx3 GR5 Bolt 22, 23, 60
88340 1-1/4NC Lock Nut 10
88340 7/8NF Slotted Nut 60, 61
88344 7/16NC Nut 59
88348 1NC Lock Nut .....
..... 14, 15, 16, 17, 18, 19, 20, 21, 22, 23
88350 1-1/4NC Slotted Nut 8, 9, 10
88351 1/4NCx3/4 Bolt 30, 31
88362 3/8 Lock Washer 46
88362 3/8Lock Washer 52, 53
88363 1/2NC Lock Nut 58
88385 3/8Ncx4x4-3/4 U-Bolt 10
88387 Thumb Screw 3/8NCx3/4 ..... 52, 53
88388 5/8NCx4x3-1/4 U-Bolt 21, 22, 23
88392 7/16NCx1-1/2 Bolt 59
88393 1NCx2-1/2 GR5 Bolt 14, 16, 18, 19
88395 5/8NCx5 GR5 Bolt 69
88399 1NCx3 GR5 Bolt 20, 21, 22, 23
88404 3/4NCx2-1/2 GR5 Bolt 4, 5, 6, 7
88427 1-1/4NCx8 GR5 Bolt 8, 9, 10
88429 1/2NFx3-1/4 GR5 Bolt 61, 63, 64
88430 1-1/4NC Lock Nut 3
88447 1NCx3-1/2 GR5 Bolt .....
..... 14, 15, 16, 17, 18, 19, 24
88453 5/8NCx4x4-1/2 U-Bolt 20, 22
88464 Plow Bolt 7/16NCx2-1/4 GR5 59
88475 1/2NCx1-1/2 GR5 Bolt .....
14, 15, 16, 17, 18, 19, 20, 21, 22, 23, 25, 67
88479 5/16NCx1-1/2 GR5 Bolt 69
88495 7/8NCx2-1/2 GR5 Bolt .....
..... 3, 6, 7, 14, 15, 16, 17, 18, 19
88501 5/8NCx3-1/2 GR5 Bolt 21, 23, 30,
..... 31, 56, 57, 58 66
88503 5/8NCx3x5-1/4 U-Bolt .....
..... 20, 21, 22, 23, 27, 29, 31
88503 5/8NCx4x4-1/2 U-Bolt 65
88514 3/8NCx4x3-3/4 U-Bolt 4, 6, 8
88515 3/8NCx4x2-3/4 U-Bolt 3, 4, 6, 14, 16, 18,69
88517 1/2NCx1-3/4 GR5 Bolt 67
88528 1/8NPT Grease Fitting 63, 64
88531 3/8NCx3 GR5 Bolt 46
88550 1/4NF Grease Fitting 26, 27, 28, 29
88553 3/8NCx1-1/2 GR5 Bolt .....
..... 3, 4, 6, 8, 9, 14, 16, 18, 52, 53
88566 3/8NCx3/4 GR5 Bolt 55
88574 1/2Ncx5-1/2 GR5 Bolt 58
88582 3/8NCx2-3/4 GR5 Bolt 26, 27, 28, 29
88599 Plow Bolt 7/16NCx1-1/2 GR5 59
88602 1-1/4 Flat Washer 3, 5, 7, 15, 17, 19
88604 3/4NCx2 GR5 Bolt 69
88622 1-1/4NC Jam Nut .....
4, 5, 6, 7, 8, 9, 10, 14, 15, 16, 17, 18, 19
88628 Roll Pin 28
88632 Plow Bolt 7/16NCx1-3/4 GR5 59
88648 1/4x1-1/4 Roll Pin 28, 29
88685 1-3/8NC Heavy Hex Nut 3
88706 Set Screw 5/16NCx5/16 ..... 52, 53, 54, 55
88738 1" SAE Flat Washer 28
88778 1/4NF 45 Grease Fitting 26, 27, 28, 29
88845 5/8NC Top Lock Nut 68
88855 1/4 Flat Washer 54
88939 3/4NCx5-1/2 GR8 Bolt 65
89004 5/16NCx2-1/2 GR5 Bolt 69
89069 3/8NCx5x4 U-Bolt 8, 9
89075 1NC Lock Nut 24
89134 1-1/4NCx7 GR5 Bolt 3

WARRANTY

The only warranty Wil-Rich gives and the only warranty the dealer is authorized to give is as follows:

We warrant products sold by us to be in accordance with our published specifications or those specifications agreed to by us in writing at time of sale. Our obligation and liability under this warranty is expressly limited to repairing, or replacing, at our option, within 12 months after date of retail delivery, any product not meeting the specifications. ***We make no other warranty, express or implied and make no warranty of merchantability or of fitness for any particular purpose.*** Our obligation under the warranty shall not include any transportation charges or costs or installation or any liability for direct, indirect or consequential damage or delay. If requested by us, products or parts for which a warranty claim is made are to be returned transportation prepaid to our factory. Any improper use, operation beyond rated capacity, substitution of parts not approved by us, or any alteration or repair by others in such manner as in our judgment affects the product materially and adversely shall void this warranty. ***No employee or representative is authorized to change this warranty in any way or grant any other warranty.***

Wil-Rich reserves the right to make improvement changes on any of our products without notice.

When warranty limited or not applicable: Warranty on hoses, cylinders, hubs, spindles, engines, valves, pumps or other trade accessories are limited to the warranties made by the respective manufactures of these components. Rubber tires and tubes are warranted directly by the respective tire manufacturer only, and not by Wil-Rich.

Warranty does not apply to any machine or part which has been repaired or altered in any way so as in the our judgment to affect its reliability, or which has been subject to misuse, negligence or accident.

A Warranty Validation and Delivery Report Form must be filled out and received by Wil-Rich to initiate the warranty coverage.

WARRANTY CLAIMS PROCEDURE

1. The warranty form must be returned to Wil-Rich within fifteen (15) working days from the repair date.

2. Parts returned to Wil-Rich without authorization will be refused. The parts must be retained at the dealership for ninety (90) days after the claim has been filed. If the Service Department would like to inspect the parts, a packing slip will be mailed to the dealer. The packing slip must be returned with the parts. The parts must be returned prepaid within thirty (30) days of receiving authorization. After the parts are inspected and warranty is verified, credit for the return freight will be issued to the dealer.

3. Parts that will be scrapped at the dealership will be inspected by a Wil-Rich Sales Representative, District Sales Manager or Service Representative within the ninety (90) day retaining period.